VEHICLE INSPECTION OPERATIONS & TRAINING MANUAL FOR OFFICIAL VEHICLE INSPECTION STATIONS (VEHICLE SAFETY INSPECTION)

This manual presented by:

DPS
Representative _____

Street _____

City _____

Phone_____

VI-87 (03/2019)

CHAPTER SELECTION

CHAPTER 1 STATION CERTIFICATION 3

CHAPTER 2 INSPECTOR CERTIFICATION 14

CHAPTER 3 STATION OPERATION 18

CHAPTER 4 INSPECTION PROCEDURES 21

CHAPTER 6 COMMERCIAL MOTOR VEHICLE 73

CHAPTER ONE
STATION CERTIFICATION
CHAPTER CONTENT

PROCEDURE FOR APPOINTMENT AS AN OFFICIAL VEHICLE INSPECTION STATION 01.05.00

CLASSES OF OFFICIAL VEHICLE INSPECTION STATIONS 01.10.00

STATION ENDORSEMENTS 01.15.00

RESPONSIBILITY OF INSPECTION STATION OWNER OR OPERATOR 01.20.00

MINIMUM REQUIREMENTS FOR OFFICIAL VEHICLE INSPECTION STATION 01.25.00

- Space Requirements 25.01
- Equipment Requirements 25.02
- Brake Test Area Specifications 25.03
- Inspection Station Display Area 25.04
- Inspection Area 25.05
- Official Vehicle Inspection Station Sign 25.06

CHANGE OF NAME, LOCATION, OR OWNERSHIP 01.30.00

GOING OUT OF BUSINESS 01.35.00

INSPECTION STATION CANCELLATIONS AND SUSPENSIONS 01.40.00

REINSTATEMENT AFTER SUSPENSION 01.45.00

LEASE OR SALE OF INSPECTION STATION DURING SUSPENSION 01.50.00

CRIMINAL VIOLATIONS 01.55.00

CHAPTER ONE
STATION CERTIFICATION

1.5.1 PROCEDURE FOR APPOINTMENT AS AN OFFICIAL VEHICLE INSPECTION STATION

Those desiring to make application for an Official Vehicle Inspection Station should notify Regulatory Services Division (RSD) personnel at a field office, any Department of Public Safety Regional Office, or the DPS Headquarters Office in Austin.

RSD personnel, with all necessary forms, will call at the place of business of the applicant for a personal inspection of the premises, personnel, and equipment to determine the ability of the applicant to conduct inspections in accordance with the provisions of the Transportation Code, Chapter 548. If the application is approved, the applicant will be notified, and upon receipt of the statutory fee which shall constitute the certificate fee until August 31 of the odd-numbered year following the date of appointment as an Official Vehicle Inspection Station, a Certificate of Appointment will be issued to the applicant. Thereafter, appointments will be made for two-year periods, and the statutory renewal fee will apply. An application fee is non-refundable. **The Department has transitioned to accepting applications for appointment as a Vehicle Inspection Station via the Internet. The application fee will be required to be paid at the time of the submission of the on-line application and is non-refundable.**

The applicant shall be informed of the required equipment, including the approved testing devices, tools, measuring devices, customer waiting area, display area, brake machines, marked brake test area, and the approved inspection test area. The applicant shall be advised not to purchase any testing equipment until notified by the Department representative that all minimum requirements are in compliance with Department rules and regulations.

An applicant for an Official Vehicle Inspection Station must meet the space, equipment, and manpower requirements as prescribed for the class of vehicle inspection station applied for, and must have a certified inspector in his employ. All appointments are provisional, and are conditioned on the proper conduct of vehicle inspections and compliance with Department rules and regulations. Inspections by appointment only are not permitted. The Department shall require an applicant for appointment as an Official Vehicle Inspection Station to furnish evidence of sound business practices. Financial instability can be a cause for disapproval.

Application forms necessary for certification as an Official Vehicle Inspection Station must be properly completed, signed, and submitted with all required fees to the Department. Incomplete applications will be withdrawn after 60 days if additional information required by the Department is not furnished. If the application is approved, on initial investigation, the applicant will be advised to proceed with the installation of testing equipment. After such installation, the Department will inspect the equipment for approval. The Department will conduct an investigation of each applicant to determine full compliance with the rules and regulations, which may include a background check of the owner or operators. Every person licensed to operate an Official Vehicle Inspection Station shall be of good reputation, character, and moral conduct.

In accordance with the Texas Transportation Code, the Department of Public Safety may disqualify any application for certification or revoke or suspend an outstanding certificate of any inspection station or the certificate to inspect vehicles of any person who has been convicted of: (1) a felony or Class A or B misdemeanor; (2) a similar crime under the jurisdiction of another state or the federal government that is punishable to the same extent as a felony or Class A or Class B misdemeanor; or (3) a crime under the jurisdiction of another state or the federal government that would be a felony or Class A or Class B misdemeanor if the crime were committed in this state.

1. A conviction for a felony or a Class A or Class B misdemeanor will be cause for disqualification, suspension, or revocation under this subsection. For purposes of this section, a person is convicted of an offense when an adjudication of guilt or an order of deferred adjudication for the offense is entered against the person by a court of competent jurisdiction.

2. The certification of an inspection station will be subject to disqualification, revocation, or suspension in the event the owner or inspector is convicted of such an offense. In the event that an inspector or inspector applicant is convicted of such an offense, that person's certification will be subject to revocation, suspension, or his application will be subject to disqualification.

The Department has determined a certified inspection station and certified inspector is in a position of trust, performing a service to members of the public where the Transportation Code, Chapter 548, requires the public to report for a vehicle inspection. Therefore, the Department has determined the following crimes relate directly to the duties and responsibilities of a certified vehicle inspection station or inspector and/or those for whom this section is applicable.

Those crimes include:

1. Arson, Criminal Mischief, and Other Property Damage or Destruction (Texas Penal Code, Chapter 28).
2. Robbery (Texas Penal Code, Chapter 29).
3. Burglary and Criminal Trespass (Texas Penal Code, Chapter 30).
4. Theft (Texas Penal Code, Chapter 31).
5. Fraud (Texas Penal Code, Chapter 32).
6. Bribery and Corrupt Influence (Texas Penal Code, Chapter 36).
7. Perjury and Other Falsification (Texas Penal Code, Chapter 37).
8. Criminal Homicide (Texas Penal Code, Chapter 19).
9. Driving Related Intoxication Offenses (Texas Penal Code, Chapter 49).
10. Texas Code of Criminal Procedures, Article 42.12 (3g) or 62.001 (Sexually Violent Offense).
11. Texas Occupations Code, Section 53.021 (a) (2)-(4).

A felony conviction for the above offenses is disqualifying for 10 years from the date of conviction, unless the offense was committed in one's capacity as a vehicle inspection station owner or inspector, or was facilitated by licensure as an owner or inspector, in which case it is permanently disqualifying. A conviction under number 10 above is permanently disqualifying.

A felony conviction for an offense not listed above is disqualifying from 5 years from the date of conviction.

A Class A Misdemeanor conviction for the offenses listed above is disqualifying for 5 years from the date of conviction.

A Class B Misdemeanor conviction for the offenses listed above is disqualifying for 2 years from the date of conviction.

A person who is disqualified as above may appeal that disqualification in accordance with 37 TAC 23.5 (h).

As an authorized owner or operator of an Official Vehicle Inspection Station, you are responsible to the Department for the proper operation of the Official Vehicle Inspection Station. An owner or operator will recognize and acknowledge their responsibility to the public to offer a good, complete and thorough inspection, according to the rules and regulations.

Based upon the application and results of investigations made, each applicant will be approved or disqualified for appointment. Each applicant approved, will be issued a Certificate of Appointment. Such Certificate of Appointment shall be for the place of business set forth in the application. The Certificate of Appointment shall not be assignable and shall be valid only for the owner or owners in whose name or names they are issued and for transaction of business only at the place designated thereon.

No business will be approved as an Official Vehicle Inspection Station until all certification requirements have been met. The inspection area must be designated and approved by the supervising Department representative. Businesses meeting all qualifications will be required to complete an application and furnish the appointment fee. The applicant will be notified of appointment as an Official Vehicle Inspection Station and a Certificate of Appointment will be issued to the applicant after the necessary forms have been completed and approved.

A Certificate of Appointment will not be issued for the operation of an Official Vehicle Inspection Station until an investigation has been made by the Department to assure that it has the proper facilities, required equipment, and is properly

qualified or has properly qualified personnel to accomplish satisfactory inspections. Companies and governmental agencies who have their own garages and repair facilities may apply for an Official Vehicle Inspection Station Certificate of Appointment provided such facilities, equipment, and personnel meet the requirements set forth in these rules and regulations.

The application shall be submitted by the owner, if a natural person, and in the case where the owner is a corporation, co-partnership or association, by two executive officers thereof or some other person(s) specifically authorized by said corporation to sign the application to which shall be attached written evidence of their authority. Proof of ownership may be required of the applicant.

When all certification requirements have been met the supervising Department representative will explain the use of all supplies and forms necessary for the operation as an Official Vehicle Inspection Station.

In accepting your appointment as an Official Vehicle Inspection Station, you accept the responsibility to properly inspect all vehicles submitted for inspection and to serve the citizens efficiently. This will be the standard used by the Department in supervising your conduct as an Official Vehicle Inspection Station. Any Official Vehicle Inspection Station which fails to maintain this standard in dealing with the public cannot be allowed to continue as an Official Vehicle Inspection Station. The procedures outlined herein should be carefully studied and frequently reviewed by your entire organization. If the inspection program is to be effective, you must be thoroughly familiar with and follow all of the provisions as outlined. If your appointment is subsequently withdrawn, it is because you and your employees have failed to follow the instructions contained in the Vehicle Inspection Operations and Training Manual.

Instructions for the renewal process will be provided well in advance of August 31 of the odd-numbered year when the station's Certificate of Appointment is due to expire.

1.10.1 CLASSES OF OFFICIAL VEHICLE INSPECTION STATIONS

The classes of Official Vehicle Inspection Stations authorized in Texas are as follows:

1. Public Station: Is a station open to the public performing inspections on vehicles presented by the public.
2. Fleet Station: A station not providing vehicle inspection services to the public.
3. Government Station: A station operated by a political subdivision, or agency of this state.

1.15.1 STATION ENDORSEMENTS

The following six (6) endorsements will be used in conjunction with the three (3) classes of Official Inspection Stations to further identify the types of inspections to be performed by each Official Inspection Station.

1. Endorsement: 1Y - may inspect any vehicle requiring a one-year inspection.
2. Endorsement: 2Y - may inspect any vehicle requiring a two-year inspection.
3. Endorsement: CW - may inspect any vehicle requiring a commercial inspection.
4. Endorsement: CT - may inspect any vehicle requiring a commercial trailer inspection.
5. Endorsement: TL - may inspect any vehicle requiring a trailer inspection.
6. Endorsement: MC - may inspect any vehicle requiring a motorcycle inspection.

1.20.1 RESPONSIBILITY OF VEHICLE INSPECTION STATION OWNER, OPERATOR OR VEHICLE INSPECTOR

Upon being appointed as an Official Vehicle Inspection Station, you as the inspection station owner, operator, or vehicle inspector will be deemed to have accepted the following obligations and responsibilities:

1. To act as directed by the Texas Department of Public Safety in inspecting vehicles in accordance with the Vehicle Inspection Operations and Training Manual.

2. To inspect only those vehicles authorized by the class of inspection station and specific endorsements.

3. To make the Vehicle Inspection Operations and Training Manual available to all certified inspectors.

4. To properly instruct all employees in accordance with this manual.

5. Use only employees certified by the Department of Public Safety to do the actual inspecting in accordance with the requirements.

6. That the owner/operator will notify the Department representative supervising the station when a certified inspector leaves employment.

7. Ensure that all inspectors will conduct honest, thorough, and efficient safety inspections as promptly as possible, in accordance with the Transportation Code and the Department's regulations.

8. Maintain in good working order all required tools and equipment prescribed in the minimum requirements and to cease operations immediately when this condition is not met.

9. Maintain a clean and orderly place of business, shop, and inspection area. (Owner is responsible for employees in this respect.)

10. Keep the required inspection records available at the Official Vehicle Inspection Station.

11. Records are to be kept on forms and in the manner prescribed by the Department and shall be available for examination during approved business hours by any authorized agent of the Texas Department of Public Safety.

12. Records shall be kept for at least one year from the date recorded.

13. Records may be removed from premises by any Department representative for investigation or evidence and shall be returned without undue delay.

14. Refrain from the use of alcohol.

15. Refrain from the use of drugs in any degree except when prescribed by a licensed physician, providing that normal faculties shall not be impaired.

16. Have a reputation for sound business practices, high moral character, and obedience to law and order.

17. Each Official Vehicle Inspection Station must have a minimum of one certified inspector on duty to perform inspections promptly during the inspection hours of the inspection station. Adequate supervision of employees certified to make inspections should be provided during this time. It is recommended that every inspection station have more than one certified inspector available to ensure prompt inspection service to the public at all times. Vacations and days off should be anticipated by management.

18. The hours of operation when inspections are performed are required to be posted at all public stations in a manner clearly visible to the public.

19. Have a display area located in the customer waiting area and of sufficient size as approved by the Department. Only official notices, licenses, letters from the Department, procedure charts, or other documents authorized by the Department may be exhibited in the display area. The designated customer waiting area must be protected from the elements.

20. Shall be solely responsible for maintaining all supplies issued by the Department in reasonably good condition

21. Shall notify the Department representative supervising the station of any change of location, name or ownership,

or when going out of business. Upon the effective date of any such change in location, name or ownership, all inspection privileges will cease.

22. Shall make inspections only at the business location designated on the Certificate of Appointment.

23. Shall record all vehicle inspections through an approved method or device at the time the inspection is conducted.

24. Shall upon termination of the Certificate of Appointment, for any reason, immediately turn over all inspection materials issued by the Department to the supervising Department representative.

25. It is your responsibility to determine that every vehicle submitted for inspection is properly and thoroughly inspected by a certified inspector and that the operation of your inspection station is in accordance with these rules and regulations. You have the duty to place vehicular safety foremost as this is the primary intent of the Texas Vehicle Inspection Program.

26. Method of Payment

    a. Payment for the purchase of safety automation fees, original application for or renewal of all certifications, replacement of any Department issued property, and/or any other fees required are due and payable at the time of order and or billing. **The Department has transitioned to accepting applications for appointment as a Vehicle Inspection Station via the Internet. The application fee will be required to be paid at the time of the submission of the on-line application and is non-refundable.**

    b. Should the online payment be denied the application will remain valid for 60 days. If online payment is not received within the 60 days the application will be withdrawn and payment and application must be resubmitted.

    c. Failure to comply with any of the above-listed responsibilities may result in revocation of the Certificate of Appointment.

01.25.00 MINIMUM REQUIREMENTS FOR OFFICIAL VEHICLE INSPECTION STATIONS

Approval of inspection station applications cannot be granted, nor appointment allowed to continue, unless full compliance with the following requirements is met and maintained.

25.1 Space

1. General Requirements

    a. The building must be a sound structure, in good repair, to qualify as an official Vehicle Inspection Station. The building must be a permanent type building with at least two permanent walls and a permanent roof. The inspection area must be located entirely within or adjacent to the building and in an area approved by the Department. Temporary expedients such as tents, arbors, or sheds are not acceptable.

    b. Every inspection station shall have an inspection area within the station, set aside and approved for conducting the inspection of vehicles. When an inspection station desires to have more than one inspection area, the space requirements for each lane must be met.

    c. At least one approved inspection area containing all the required equipment is to be available during inspection hours.

    d. The inspection area is defined as the designated space approved for inspection purposes. Approval cannot be granted, nor permitted to continue, unless full compliance of the minimum inspection station requirements is maintained.

    e. The inspection lane area shall be sufficiently lighted to afford good visibility for performing all inspection procedures.

f. The entire floor of the approved inspection area of the building shall be hard surfaced such as asphalt or concrete.

g. Lifts, pits, and runners are permissible if all other requirements are met.

h. The inspection area must be free of any obstructions that will interfere with inspections. Work benches, storage cabinets, or tools may be allowed if sufficient space to conduct inspection is not affected. The door or building opening must be of sufficient size to accommodate the normal size of vehicle the station is endorsed to inspect.

i. An approved inspection area will be maintained at all times during inspection periods so that vehicles may be inspected without unreasonable delay.

j. Have a display area located in the customer waiting area of sufficient size as approved by the Department.

k. Have a designated customer waiting area protected from the elements.

l. Have a secured area for storage of records and necessary supplies.

2. Specific Requirements

a. Public, Fleet, and Government Classes of Inspection Stations

i) The inspection area shall include: an area of 12 feet wide by 24 feet long of minimum space. The inspection area must be in an area approved by the Department.

ii) Floors: The entire floor must be hard surfaced, such as asphalt or concrete.

iii) Government inspection stations shall meet all of the requirements as prescribed for a public inspection station.

iv) Fleet inspection stations shall meet all the requirements as prescribed for a public inspection station. Fleet inspection stations may only inspect vehicles owned by the company or under bona fide lease to the company or vehicles that are covered under a current service contract with the company.

v) Fleet and government inspection stations are not permitted to inspect the personal vehicles of officers, employees, or the general public. This applies even though personal vehicles may be used part- or full-time for business.

vi) Inspection stations will not be approved where free access to the inspection station grounds is not granted to representatives of the Department.

vii) Firms open to the public will not be issued a fleet inspection station Certificate of Appointment except in instances where such firms are currently certified as a public inspection station and desire a fleet inspection station Certificate of Appointment.

b. Trailer Endorsement Inspection Stations

i) The building must be of a permanent type suitable for display area, tools, and storage for records and necessary supplies.

ii) Inspection area may be of any hard surfacing material such as asphalt or concrete.

c. Motorcycle Endorsement Inspection Stations

i) The inspection area shall include: an area of 8 feet wide by 10 feet long of minimum space.

ii) Floors: The entire floor of the approved inspection area of the building must be hard surfaced, such as asphalt or concrete.

25.2 Equipment

1. General Requirements for All Classes of Inspection Stations

   a. The minimum amount of tools, equipment, approved testing devices, and a current Operations and Training Manual must be available online at all times at the inspection station.

   b. All required testing equipment used at an inspection station must have been approved for such use by the Department. The inspection station owner or operator shall have the responsibility for the use, accuracy, and general maintenance of all equipment. All testing equipment shall be installed and used in accordance with the Department's recommendation. To ensure proper functioning, equipment shall be checked and calibrated frequently and shall be properly maintained. Inspections may not be conducted when any required testing device is malfunctioning until the device has been repaired and subsequently approved for use by the Department. Equipment shall be arranged and located at or near the approved inspection area to obtain maximum efficiency.

   c. Every certified inspector shall have a working knowledge of all testing devices used in the performance of an inspection in their inspection station. It is also necessary that the certified inspector know the procedure for setting, calibrating, and otherwise causing such equipment to be accurate and effective, according to the Department's recommendations.

   d. Each Official Vehicle Inspection Station is required to own and maintain the minimum amount of equipment, as listed below.

      i) Tools and facilities for making tests, repairs, and adjustments ordinarily encountered on those types of vehicles to be inspected.

      ii) A brake test area which has been approved by the supervising Department representative, measured and marked as follows: 0, 25', 30', 40', and 50' OR an approved brake testing device.

      iii) A measuring device(s) clearly indicating a 12-inch measurement, a 15-inch measurement, a 20-inch measurement, a 24-inch measurement, a 54-inch measurement, a 60-inch measurement, a 72-inch measurement, and an 80-inch measurement to measure height, width of lighting, and other safety equipment except the 80-inch measurement is not required of motorcycle only vehicle inspection stations.

      iv) A gauge for measuring tire tread depth calibrated in 32nds of an inch and designed with a metal probe.

      v) A measuring device for checking brake pedal reserve clearance except motorcycle only inspection stations.

      vi) A Department-approved device for measuring the light transmission of sun screening devices. This equipment requirement may not apply to government, fleet, or other types of inspection stations as determined by the Department.

      vii) A Department-approved device for checking gas caps. The Department requires vehicle inspection stations to obtain updated adapters as they become available from the manufacturer. A vehicle inspection station may not inspect a vehicle for which it does not have an approved adapter for that vehicle. This equipment requirement may not apply to government, fleet, or other types of inspection stations as determined by the Department.

      viii) An approved and operational electronic station interface device and a telephone line, or internet connection for the electronic station interface device.

   e. All Official Vehicle Inspection Stations equipped with approved testing devices, (decelerometers and brake machines) which manufacturers have discontinued may use them as long as they are in proper working order, capable of testing, and as long as they can continue to get service and repairs for them. When they are no longer serviceable, they must be replaced.

25.3 Brake Test Area Specifications

Every vehicle inspection station must have a designated brake test area where road tests are conducted unless a brake testing machine is used for brake tests. Any number of inspection stations may use the same area in a given town if authorized by the Department representative.

All road tests for braking efficiency shall be made only at a measured, marked, and approved brake test area. The area shall be substantially level (not to exceed plus or minus 1% grade), smooth, hard surfaced, and free of loose material, oil, or grease. The area must be designated by painted lines, stakes or other devices noting where the brakes are to be applied; 25 feet forward from this beginning designation, there should be another marker; 5 feet further from the second marker (at 30 feet) there should be a third marker; 10 feet further from the third marker (at 40 feet) there should be a fourth marker. Those inspection stations that inspect large truck-trailer combinations will be required to have an additional line or marker, 50 feet.

It is the responsibility of the inspection station owner or operator to secure an acceptable area and maintain the painted lines, stakes, or other devices indicating the brake test area. In some instances, all of the above-mentioned lines or markers will not be necessary. You should consult the Department representative supervising your inspection station as to the number required.

The brake test area and location must be marked and maintained by the inspection station.

The area and location must be approved by the Department representative supervising the station. Any change in the location or additions to the brake test area must be approved by the supervising Department representative.

25.04 Inspection Station Display Area

1. Certified Official Vehicle Inspection Stations are required to display in the customer waiting area a certificate of appointment, procedure chart, and other notices in a manner prescribed by the department.

2. Have a display area located in the customer waiting area of sufficient size as approved by the Department.

25.05 Inspection Area

1. The inspection area is the designated space approved for inspection purposes and located entirely within the Official Vehicle Inspection Station structure.

2. Trailers, semitrailers, mobile homes, motor homes and vehicles which are too large for the standardized inspection bays need to be inspected within the inspection building. However these types of vehicles must be inspected near the inspection building in a space approved by the supervising Department representative.

3. Official Vehicle Inspection Stations must be kept clean and all vehicles must remain in the approved inspection area during the entire inspection, except for road testing purposes.

4. A modification of building which changes length or width to less than required will be cause for cancellation of the station's Certificate of Appointment.

5. Inspection stations shall be ready to conduct inspection during approved inspection hours at any time during the year. This means that the floor area used for inspection must be kept clean and clear of obstructions, and all necessary equipment in place and ready to use.

6. All required testing equipment will be grouped and displayed at the approved inspection area at all times unless in use.

7. Each official vehicle inspection station shall display in the customer waiting area, the Certificate of Appointment, procedure chart, posters, or other informational material as directed by the Department.

8. The inspection lane shall be free from mechanical repair work for the purpose of vehicle inspection. No major repair shall be performed in this rea during approved work hours when inspections are to be performed. Minor repair jobs performed in this lane must be of such a nature that the vehicle undergoing such repair can be easily moved out of the area for the purpose of

inspection of another vehicle.

9. Official Vehicle Inspection Stations shall not refuse to inspect any vehicle, for which an endorsement is held, that is presented for inspection, if the vehicle is of the type authorized to be inspected at an Official Vehicle Inspection Station, provided the necessary tools and equipment needed to compete that inspection are available.

10. When refusing to inspect for a justified cause, it is a good practice to know and refer the customer to another convenient station that is qualified to serve the customer.

25.6 Vehicle Inspection Station Signage

1. In order to meet the minimum requirements for vehicle inspection stations in Texas, every Official Vehicle Inspection Station, except fleet and government inspection stations, is required to display, at all times during the official life of the station, the Official Vehicle Inspection Station sign.

2. The sign and replacements are provided by the state at no cost to the station and shall always remain the property of the Department and serve as a means of identification of the Official Vehicle Inspection Station.

3. Only one official sign will be displayed at any public inspection station, but dissimilar signs may be displayed. The supervising Department representative will issue only one sign per public inspection station license issued.

4. Signs will be displayed from the inspection station building facing the street, preferably in the open to provide maximum visibility along with hours of operation.

5. The sign shall be surrendered upon demand of the Department.

01.30.00 CHANGES AND UPDATES TO VEHICLE INSPECTION STATION INFORMATION

A vehicle inspection station certificate holder must notify the Department of a business name change in a manner prescribed by the Department within 30 days of such change.

Upon the effective date of any such change of location, name, or ownership, all of your inspection privileges will cease under the former name or address, and you will not be allowed to inspect vehicles under the new name or location or as a new owner until you are certified by the Department.

The Certificate of Appointment fee for any such change in location, or ownership will be the same as for a new inspection station application.

Failure to comply with the requirement of this section may result in criminal prosecution, as well as necessary civil recover y action and may impede any reappointment of the vehicle inspection station.

01.35.00 GOING OUT OF BUSINESS

Whenever any Official Vehicle Inspection Station goes out of business, the owner or operator shall notify the Department representative supervising the station of this intent and immediately return all forms, and sign furnished by the Department, and any other official materials relating to inspections to the Department. A final accounting of all forms and other items shall be conducted immediately upon termination of business.

Failure to comply with the requirement of this section may result in criminal prosecution, as well as necessary civil recover y action and may impede any reappointment of the vehicle inspection station.

01.40.00 INSPECTION STATION CANCELLATIONS AND SUSPENSIONS

Discontinuance of business for any reason, changes of location, name, or ownership automatically cancels your inspection station authorization to inspect.

Any inspection station whose Certificate of Appointment is suspended or revoked shall return all supplies to the Department and no such inspection station shall inspect vehicles while its Certificate of Appointment is suspended or revoked. All inspection supplies furnished by the Department are to be surrendered to the Department in the event an inspection station terminates its business or upon the suspension or revocation of the Certificate of Appointment.

Failure to comply with the requirement of this section may result in criminal prosecution, as well as necessary civil recovery action and may impede any reappointment of the vehicle inspection station.

01.45.00 REINSTATEMENT AFTER SUSPENSION

After expiration of suspension in which the Certificate of Appointment has expired, a vehicle inspection station owner desiring reinstatement may request reinstatement by contacting a Department representative. The station must meet minimum requirements for class of station. A properly completed application in a manner prescribed by the department, along with the statutory Certificate of Appointment fee will be submitted.

After expiration of suspension of which the Certificate of Appointment has not expired a vehicle inspection station owner desiring to reinstate may request reinstatement by contacting a Department representative. The station must meet the minimum requirements for their class of station. No Certificate of Appointment fee is required.

No person may apply for certification as a vehicle inspection station after disqualification or revocation by the Director of the Department of Public Safety until such time as the applicant complies with all requirements for certification.

1.50.1 LEASE OR SALE OF INSPECTION STATION DURING SUSPENSION

A change of ownership or lease to another person during a suspension period will require the new owner or lessee to complete an application for certification. All procedures for a new application including all forms and an investigation will be required.

The lease of the building and/or inspection bay will in addition require:

1. A copy of the lease agreement submitted with the application for appointment as an Official Inspection Station.

2. A suspended, revoked, or denied owner/operator may not supervise the inspection of any vehicle nor otherwise participate in the inspection of any vehicle.

3. Certification may not be issued to an immediate family member if the immediate family member's certification is pending or revoked unless the person submits an affidavit stating the certificate holder who is the subject of suspension, revocation or pending action, has no, nor will have any, further involvement in the business of State inspections.

4. A station's Certificate of Appointment will be subject to revocation in the event the Department discovers the

previous certificate holder is involved in the inspection business at that location.

1.55.1 CRIMINAL VIOLATIONS

All bona fide complaints received by the Department about any inspection station shall be investigated for the purpose of determining whether there has been a violation of the Transportation Code or the applicable rules and regulations.

Appropriate action will be taken when it appears from any investigation that the Transportation Code or any regulation included herein has been violated by an inspection station or its agents or employees.

Any owner of an Official Vehicle Inspection Station, agent, servant, or employee who violates any provision of the Transportation Code, the rules and regulations, or requires the repair of any equipment other than that equipment required to be inspected, upon conviction, may be subject to a penalty.

The Transportation Code states that it is a violation of the law or administrative rules to commit any of the following acts:

1. Issuing a Vehicle Inspection Report with knowledge that the issuance is in violation of this chapter or rules adopted under this chapter.

2. Falsely or fraudulently representing to the owner or operator of a vehicle that equipment inspected or required to be inspected must be repaired, adjusted, or replaced for the vehicle to pass an inspection.

3. Misrepresenting:

    a. material information in an application in violation of Transportation Code, Section 548.402 or 548.403; or

    b. information filed with the department under this chapter or as required by department rule;

4. Issuing a Vehicle Inspection Report:

    a. without authorization to issue the Vehicle Inspection Report; or

    b. without inspecting the vehicle;

5. Issuing a Vehicle Inspection Report for a vehicle with knowledge that the vehicle has not been repaired, adjusted, or corrected after an inspection has shown a repair, adjustment, or correction to be necessary;

6. Knowingly issuing a Vehicle Inspection Report:

    a. for a vehicle without conducting an inspection of each item required to be inspected; or

    b. for a vehicle that is missing an item required to be inspected or that has an item required to be inspected that is not in compliance with state law or department rules;

7. Refusing to allow a vehicle's owner to have a qualified person of the owner's choice make a required repair, adjustment or correction;

8. No additional fee may be charged above the required inspection fee with the exception of any approved repairs.

9. Performing an act prohibited by or fails to perform an act required by this chapter or a rule adopted under this chapter.

Unless otherwise prescribed by law, the offense is a Class C misdemeanor. A designated representative of the department may issue a notice of an offense or a notice to appear to a person, including an inspector or inspection station, who violates this chapter or a rule adopted under this chapter.

CHAPTER TWO
INSPECTOR CERTIFICATION
CHAPTER CONTENT

CERTIFICATION PROCEDURES 02.05.00

CHANGES AND UPDATES TO VEHICLE INSPECTOR EMPLOYMENT, ADDRESS, OR NAME 02.10.00

CHAPTER TWO
INSPECTOR CERTIFICATION

2.5.1 CERTIFICATION PROCEDURES

Those desiring to make application to become a Certified Vehicle Inspector should notify Regulatory Services Division (RSD) personnel at a field office, any Department of Public Safety Regional Office, or the Headquarters Office in Austin.

The certification of persons to inspect vehicles shall be in accordance with the rules and regulations promulgated by the Department.

In accordance with the Texas Transportation Code, the Department of Public Safety may disqualify any application for certification or revoke or suspend the certificate to inspect vehicles of any person who has been convicted of: (1) a felony or Class A or B misdemeanor; (2) a similar crime under the jurisdiction of another state or the federal government that is punishable to the same extent as a felony or Class A or Class B misdemeanor; or (3) a crime under the jurisdiction of another state or the federal government that would be a felony or Class A or Class B misdemeanor if the crime were committed in this state.

The Department has determined a certified vehicle inspector is in a position of trust, performing a service to members of the public where the Transportation Code, Chapter 548, requires the public to report for vehicle inspection. Therefore, the Department has determined the following crimes relate directly to the duties and responsibilities of a certified vehicle inspection inspector and/or those for whom this section is applicable. Those crimes include:

1. Arson, Criminal Mischief, and Other Property Damage or Destruction (Texas Penal Code, Chapter 28).
2. Robbery (Texas Penal Code, Chapter 29).
3. Burglary and Criminal Trespass (Texas Penal Code, Chapter 30).
4. Theft (Texas Penal Code, Chapter 31).
5. Fraud (Texas Penal Code, Chapter 32).
6. Bribery and Corrupt Influence (Texas Penal Code, Chapter 36).
7. Perjury and Other Falsification (Texas Penal Code, Chapter 37).
8. Criminal Homicide (Texas Penal Code, Chapter 19).
9. Driving Related Intoxication Offenses (Texas Penal Code, Chapter 49).
10. Texas Code of Criminal Procedures, Article 42.12 (3g) or 62.001 (Sexually Violent Offense).
11. Texas Occupations Code, Section 53.021 (a) (2)-(4).

A felony conviction for the above offenses is disqualifying for 10 years from the date of conviction, unless the offense was committed in one's capacity as a vehicle inspection station owner or inspector, or was facilitated by licensure as an owner or inspector, in which case it is permanently disqualifying. A conviction under number 10 above is permanently disqualifying.

A felony conviction for an offense not listed above is disqualifying from 5 years from the date of conviction.

A Class A Misdemeanor conviction for the offenses listed above is disqualifying for 5 years from the date of conviction.

A Class B Misdemeanor conviction for the offenses listed above is disqualifying for 2 years from the date of conviction.

For purposes of this section, a person is convicted of an offense when an adjudication of guilt or an order of deferred adjudication for the offense is entered against the person by a court of competent jurisdiction.

A person who is disqualified as above may appeal that disqualification in accordance with 37 TAC 23.5 (h).

Application forms necessary for certification as a Certified Vehicle Inspector must be properly completed, signed, and submitted with all required fees to the Department. Incomplete applications will be withdrawn after 60 days if additional information required by the Department is not furnished. The Department will conduct an investigation of each applicant to determine full compliance with the rules and regulations, which may include a background check of the inspector applicant. Every person licensed to inspect at an Official Vehicle Inspection Station shall be of good reputation, character, and moral conduct.

A Certified Vehicle Inspector will recognize and acknowledge their responsibility to the public to offer a good, complete and thorough inspection, according to the rules and regulations.

Based upon the application and results of investigations made, each applicant will be approved or disqualified for appointment.

Vehicle inspector applicants must meet the following:

1. A vehicle inspector must be 18 years of age.
2. Hold a valid driver license to operate a motor vehicle in Texas.
3. Not currently suspended or revoked in the Texas Vehicle Inspection Program.
4. Complete Department approved training.
5. Pass with a grade of not less than 80 on an examination pertinent to the Vehicle Inspection Program.
6. Successfully demonstrate ability to correctly operate the required testing devices.
7. Meet all other eligibility criteria.
8. Pay the statutory fee **at the time of application. The Department has transitioned to accepting applications for appointment as a Certified Vehicle Inspector via the Internet. The application fee will be required to be paid at the time of the submission of the on-line application.**

The applicant for a vehicle inspector certification will be given an opportunity to pass the written exam up to 3 times within 30 days from the date of training. Failure to pass the exam within 30 days from the date of training will terminate the application process. The applicant must then reapply, attend the training course again, and will again have 3 tries to successfully pass the written examination within the 30 day time limit.

Each certified vehicle inspector must possess one or more of the following vehicle inspection endorsements:

1. S. May inspect any vehicle requiring a safety only vehicle inspection.
2. C. May inspect any vehicle requiring a commercial vehicle inspection.
3. E. May inspect any vehicle requiring an emission vehicle inspection.

The Department representative may, when the vehicle inspector performance warrants, require the certified vehicle inspector to take all or part of the written and/or demonstration test at any time, or may require attendance at any vehicle inspection training program. Failure to pass a required test may result in suspension of the vehicle inspector's certification.

Instructions for the renewal process will be provided well in advance of August 31 of the even- numbered year when the inspector's certification is due to expire. Once a completed application for renewal of a vehicle inspector certification is received by the Department, the applicant may be required to receive training and take a test prior to recertification.

2.10.1 CHANGES AND UPDATES TO VEHICLE INSPECTOR EMPLOYMENT, ADDRESS, OR NAME.

a) If a certified vehicle inspector changes their place of employment, the inspector must prove their ability to correctly operate the testing equipment at such new vehicle inspection station.
b) If a certified vehicle inspector changes their place of residence, the inspector must notify the department of their new permanent street address within 30 days of the date of the change.
c) If a certified vehicle inspector changes their name, the inspector must notify the department of their new name within 30 days of the date of the change.

CHAPTER THREE
STATION OPERATION
CHAPTER CONTENT

INSPECTION REFUSALS 03.05.00

ELECTRONIC VEHICLE INSPECTION STATION INTERFACE DEVICE ACCESS 03.10.00

VEHICLE INSPECTION REPORTS..... 03.15.00

METHOD OF PAYMENT 03.20.00

VEHICLE INSPECTION FEES..... 03.25.00

RETENTION OF RECORDS..... 03.30.00

VEHICLE INSPECTION STATION RECORD AUDITS..... 03.35.00

3.5.1 INSPECTION REFUSALS

a. No Official Vehicle Inspection Station during posted business hours shall refuse to inspect a vehicle that is presented for inspection without an objective justifiable cause related to safety. Official Vehicle Inspection Stations will be required to inspect only those types of vehicles authorized by the endorsement(s) to their Certificate of Appointment.

b. A vehicle inspection station must refuse to inspect any motor vehicle for which no evidence of financial responsibility is presented. Any vehicle which is too large for the inspection station entrance must be inspected near the inspection building in a space approved by the Department representative.

c. A vehicle inspection station must refuse to inspect any motor vehicle equipped with a Compressed Natural Gas (CNG) tank(s) that have an expired label or no letter of documentation.

3.10.1 ELECTRONIC VEHICLE INSPECTION STATION INTERFACE

d. All vehicle inspections performed must be reported using an approved method or device at the time the inspection is conducted. Access to the system at certified vehicle inspection stations must be controlled using procedures, processes, and protocols as established by the Department.

e. The records maintained in the database are governmental records. Fraudulent use of the database may subject the person to criminal prosecution, as well as administrative action.

f. Vehicle inspectors and all other authorized users will be held accountable for the security and confidentiality of all assigned access processes including, but not limited to, passwords, protocols, or access/identification cards.

g. Before each official vehicle inspection begins, the inspector must use a unique identifier protocol as established by the Department which links the inspection record with the certified vehicle inspector performing the inspection. The inspector of record entering his unique identifier will be responsible for the inspection of all required items of inspection, entering all information into the electronic station interface device at the time of inspection, and completing other documents as required.

h. Vehicle inspectors may not give, share, lend, or divulge this unique identifier protocol, including but not limited to: passwords, personal identification numbers (PIN), or access/identification cards to another person. Failure to comply with this section may result in suspension or revocation of the vehicle inspector's Certification, as well as any appropriate criminal action or administrative disciplinary action.

i. The Department may require certified vehicle inspectors to acknowledge the Department's policy for use and protection of access procedures.

j. If the electronic station interface or printer is not operational, no inspections may be performed.

k. The vehicle inspection data must be reported using the electronic station interface prior to the performance of any additional inspections.

3.15.1 VEHICLE INSPECTION REPORTS

a. Vehicles that do not meet the inspection requirements must be issued a failed Vehicle Inspection Report.

b. If an inspector makes a mistake on a Vehicle Inspection Report, the vehicle shall be inspected again and a new Vehicle Inspection Report issued at no charge.

c. A passenger car or light truck that qualifies for a two-year inspection is one that is: sold in this state; has not been previously registered in this or another state; and on the date of sale is of the current or preceding year model. A “passenger car” means a motor vehicle, other than a motorcycle, used to transport persons and designed to accommodate 10 or fewer passengers. A motor home not registered as a commercial vehicle is considered to be a passenger car.

A “light truck” means a truck, including a pickup truck, panel delivery truck, or carryall truck, that has a manufacturer’s rated carrying capacity (MRCC) of 2000 pounds or less. Generally, the National Highway Traffic Safety Administration (NHTSA) considers the manufacturer’s rated carrying capacity (payload/load carrying capacity) to be the Gross Vehicle Weight Rating minus the Empty Weight of the vehicle. A vehicle inspection station should carefully review the MRCC of any vehicle with a GVWR of 7,000pounds or more to ensure that the vehicle is eligible for a two-year inspection. Vehicle specification details, including the MRCC, are readily available from the vehicle manufacturer.

3.20.1 METHOD OF PAYMENT

a. Payment for the purchase of safety automation fees, original application for or renewal of all certifications, replacement of any Department issued property, and/or any other fee required by Texas Transportation Code, Chapter 548 or this chapter, are due and payable at the time of order and/or billing. **The Department has transitioned to accepting applications for appointment as a Vehicle Inspection Station or Certified Vehicle Inspector via the Internet. The application fee will be required to be paid at the time of the submission of the on-line application.**

b. Should the online payment be denied, the application will remain valid for 60 days. If online payment is not received within the 60 days, the application will be withdrawn and payment and application must be resubmitted.

c. If payment is dishonored prior to issuance of the certification, the application will be abandoned as "incomplete". The department may dismiss a pending revocation proceeding upon receipt of payment of the full amount due including any additional fees.

3.25.1 VEHICLE INSPECTION FEES

a. The vehicle inspection fee is a charge for performing the inspection only, and may not exceed the amount set by Texas Transportation Code, Chapter 548 or this chapter.

b. The vehicle inspection station may collect the inspection fee at the time of the original inspection whether the vehicle is passed or rejected. Every inspection shall be completed before a vehicle is passed or rejected.

c. Charges for additional services related to the repair, replacement or adjustment of the required items of inspection must be expressly authorized or approved by the customer and must be separately listed on the bill from the statutorily mandated inspection fee.

d. A vehicle inspection station or vehicle inspector may not advertise, charge, or attempt to charge a fee in a manner that could reasonably be expected to cause confusion or misunderstanding on the part of an owner or operator presenting a vehicle regarding the relationship between the statutorily mandated inspection fee and a fee for any other service or product offered by the vehicle inspection station

3.30.1 RETENTION OF RECORDS

a. Records must be kept in a secured area within the vehicle inspection station.

b. Records must be filed in a manner to ensure ready availability.

c. The vehicle inspection station is not required to maintain duplicate paper records of electronically reported inspections or transactions.

3.35.00 VEHICLE INSPECTION STATION RECORD AUDITS

Vehicle inspection stations must grant access to the Department representative for the purpose of auditing records pertaining to the Department's Vehicle Inspection Program. Records must be made available to the Department's representative at the station premises.

CHAPTER FOUR
INSPECTION PROCEDURES
CHAPTER CONTENT

INSPECTION ITEMS FOR VEHICLE CLASSES 4.5.1

Passenger Car 5.2
Pickup, Panel, or Truck under 80 inches wide 5.3
Truck 80 inches or more, overall width 5.4
Truck-Tractor (Safety Only) 5.5
Bus (except School Bus), Motor Home 5.6
Trailers, Semitrailers, Pole Trailers, or Mobile Homes Exceeding 7,500 pounds gross weight 5.7
AutoCycle 5.8
Motorcycle and Motor-Driven Cycle 5.9
Moped 5.10
School Bus 5.11

PRIOR TO INSPECTION 4.10.00

INSPECTION REQUIREMENTS 4.15.1

Vehicles Exempt from Inspection 15.2
General Inspection Requirements 15.3
Foreign Vehicles 15.4
All-Terrain Vehicles 15.5
Unique Vehicles (Reconstructed/Rebuilt Vehicles, Engine Swaps, Kit Cars, Miniature Motorcycles, Neighborhood Electric Vehicles, Low Speed Vehicles) 15.6
Multi-Purpose Vehicles 15.7
Compressed Natural Gas (CNG) 15.8
Unsafe Vehicles 15.9
Special Lighting Devices and Reflector Requirements 15.10
Commercial Motor Vehicle Inspection Program 15.11

INSPECTION ITEM CRITERIA 4.20.1
Compressed Natural Gas (CNG) 20.2
Beam Indicator 20.3
Brakes – General Information 20.4
Service Brake Test Methods 20.5
Brake Test Procedures 20.6
Platform-Type Brake Tester 20.7
Roller-Type Brake Tester 20.8

Decelerometer-Type Brake Tester 20.9
Autocycle, Motorcycle, Motor – Driven Cycle, and Moped Brake Requirements 20.10
Service Brake Inspection/Rejection Criteria 20.11
Electric Brake Systems 20.12
Parking Brake 20.13
Vacuum Brake System 20.14
Air Brake System 20.15
Clearance Lamps 20.16
Exhaust Emission System 20.17
Exhaust System 20.18
Headlamps 20.19
Horn 20.20
License Plate Lamp 20.21
Mirrors 20.22
Reflectors (Rear) 20.23
Reflectors (Side) 20.24
Safety Guards or Flaps 20.25
Seat Belts 20.26
Side Marker Lamps 20.27
Steering 20.28
Stop Lamps 20.29
Tail Lamps 20.30
Tires 20.31
Turn Signal Lamps 20.32
Vehicle Identification Number, Motor or Serial Number 20.33
Wheel Assembly 20.34
Window Tinting 20.35
Windshield Wipers 20.36
Rejected Vehicles 20.37
Repairs 20.38

RECOMMENDED INSPECTION PROCEDURE 04.25.0

ANNEX 04.30.0

Insurance ..... Annex 1
Brakes ..... Annex 2
Buses and Trailer Lighting Requirements ..... Annex 3
Conspicuity Requirements ..... Annex 4
Examples of Defective Equipment ..... Annex 5

4.5.1 INSPECTION ITEMS FOR VEHICLE CLASSES.

4.5.2 INSPECT EVERY PASSENGER CAR AND MOTOR HOME UNDER 80 INCHES WIDE FOR:

*Check for evidence of Financial Responsibility/CNG tank expiration (if equipped) and/or documentation.

1. Horn
2. Windshield Wipers
3. Mirror
4. Steering
5. Seat Belts
6. Brakes (system) (Parking – beginning with 1960 models)
7. Tires
8. Wheel Assembly
9. Exhaust System
10. Exhaust Emissions System (beginning with 1968 models)
11. Beam Indicator (beginning with 1948 models)
12. Tail Lamps (2); (1) if 1959 or earlier
13. Stop Lamps (3); including the Center High Mount Stop Lamp (1986 and newer passenger cars); (2) if 1960 thru 1985; (1) if 1959 model or earlier
14. License Plate Lamp (1)
15. Rear Red Reflectors (2)
16. Turn Signal Lamps (beginning with 1960 models)
17. Head Lamps (2)
18. Motor, Serial, or Vehicle Identification Number
19. Inspect for applied window tinting or coating
20. Gas Caps on gasoline powered vehicles 2 thru 24 years old

4.5.3 INSPECT EVERY PICKUP, PANEL, OR TRUCK UNDER 80 INCHES WIDE FOR:

* Check for evidence of Financial Responsibility/CNG tan expiration (if equipped) and/or documentation.

1. Horn
2. Windshield Wipers
3. Mirror
4. Steering
5. Seat Belts
6. Brakes (system) parking – (beginning with 1960 models)
7. Tires
8. Wheel Assembly
9. Safety Guards of Flaps (if four tires or at least two super single tires on the rearmost axle)
10. Exhaust System
11. Exhaust Emissions System (beginning with 1968 models)
12. Beam Indicator (beginning with 1948 models)
13. Tail Lamps (2); (1) if 1959 model or earlier Stop Lamps (3); including the Center High Mount Stop Lamp (1994 and newer); (2) if 1960 thru 1993; (1) if 1959 model or earlier
14. License Plate Lamp (1)
15. Rear Red Reflectors (2)
16. Turn Signal Lamps (beginning with 1960)
17. Head Lamps (2)
18. Motor, Serial, or Vehicle Identification Number
19. Inspect for applied window tinting or coating
20. Gas caps on gasoline powered vehicles 2 thru 24 model years old

4.5.4 INSPECT EVERY TRUCK 80 INCHES OR MORE IN OVERALL WIDTH FOR:

1. Horn
2. Windshield Wipers
3. Mirror
4. Steering
5. Seat Belts

6. Brake system (Parking – beginning with 1960 models)
7. Tires
8. Wheel Assembly
9. Safety Guards or Flaps (if four tires or at least two super single tires on the rearmost axle)
10. Exhaust System
11. Exhaust Emissions System (beginning with 1968 models)
12. Beam Indicator (beginning with 1948 models)
13. Tail Lamps (2); (1) if 1959 model or earlier
14. Stop Lamps (2); (1) if 1959 model or earlier
15. License Plate Lamp (1)
16. Rear Red Reflectors (2)
17. Turn Signal Lamps
18. Clearance Lamps
19. Side marker Lamps
20. Side Reflectors
21. Head Lamps (2)
22. Motor, Serial or Vehicle Identification Number
23. Inspect for applied window tinting or coating
24. Gas caps on gasoline powered vehicle 2 through 24 years old

Overall width is determined by measuring from the widest part on one side to the widest part on the other side of the vehicle. In some vehicles this may be the dual wheels which would be considered as part of the width. Do not include an outside mirror or mirrors in determining overall width.

4.5.5 INSPECT EVERY TRUCK- TRACTOR FOR:

*Check for evidence of Financial Responsibility/CNG tank expiration (if equipped) and/or documentation.

1. Horn
2. Windshield Wipers
3. Mirror
4. Steering

5. Seat Belts

6. Brakes (system) Parking – (beginning with 1960 models)

7. Tires

8. Wheel Assembly

9. Exhaust System

10. Exhaust Emissions System (beginning with 1968 models)

11. Beam Indicator (beginning with 1948 models)

12. Tail Lamps (2); (1) if 1959 model or earlier

13. Stop Lamps (2); (1) if 1959 model or earlier

14. Rear Red Reflectors (2)

15. Turn Signal Lamps

16. Clearance Lamps (2)

17. Head Lamps (2)

18. Motor, Serial or Vehicle Identification Number

19. Inspect for applied window tinting or coating

20. Gas caps on gasoline powered vehicles 2 thru 24 model years old

21. License Plate Lamp (required if the truck- tractor has a rear license plate)

Definition of a Truck-Tractor. Every motor vehicle designed and used primarily for drawing other vehicles and not so constructed as to carry a load other than a part of the weight of the vehicle and load so drawn.

4.5.6 INSPECT EVERY BUS (EXCEPT SCHOOL BUS), OR MOTOR HOME OVER 80 INCHES WIDE FOR:

*Check for evidence of Financial Responsibility/CNG tank expiration (if equipped) and/or documentation

1. Horn

2. Windshield Wipers

3. Mirror

4. Steering

5. Seat Belt

6. Brakes (system) Parking – (beginning with 1960 models)

7. Tires

8. Wheel Assembly

9. Exhaust System

10. Exhaust Emissions System (beginning with 1968 models)

11. Beam Indicator (beginning with 1948 models)

12. Tail Lamps (2)

13. Stop Lamps (2)

14. License Plate Lamp (1)

15. Rear Red Reflectors (2)

16. Turn Signal Lamps

17. Clearance Lamps

18. Side Marker Lamps

19. Side Reflectors

20. Head Lamps (2)

21. Motor, Serial, or Vehicle Identification Number

22. Inspect for applied window tinting

23. Gas caps on gasoline powered vehicles 2 thru 24 model years old

4.5.7 INSPECT ALL TRAILERS, SEMITRAILERS, POLE TRAILERS, OR MOBILE HOMES EXCEEDING 7,500 POUNDS ACTUAL GROSS WEIGHT OR REGISTERED WEIGHT (SEE DESCRIPTION BELOW) FOR:

*Check for evidence of Financial Responsibility on towing vehicle.

1. Brakes (system) (If gross weight exceeds 7,500 pounds)

2. Tires

3. Wheel Assembly

4. Safety Guards or Flaps (if four tires or at least two super single tires on the rearmost axle)

5. Tail Lamps (2)

6. Stop Lamps (2)

7. License Plate Lamp

8. Rear Red Reflectors (2)

9. Turn Signal Lamps

10. Clearance Lamps

11. Side Marker Lamps

12. Side Reflectors

13. Side Marker Lamps

14. Motor, Serial or Vehicle Identification Number

NOTE: On House moving Dollies and Converter Dollies, the items of inspection are:

a. Brakes (on converter dollies only)
b. Tires
c. Wheel Assembly
d. Coupling Devices (on convertor dollies)
e. Reflector, rear, red (2), one on each side
f. Tail Lamps, rear, red (2), one on each side
g. Stop Lamps, rear red (2), one on each side

Gross Weight means the weight of the trailer plus the weight of the load; and **registered weight** is the amount of gross weight the vehicle is licensed to carry. If a trailer has an empty weight of 3.000 lbs. and is being used to carry 2,000 lbs., of weight, the trailer's gross weight would be 5,000 lbs. thus requiring a vehicle inspection report.

4.5.8 INSPECT EVERY AUTO CYCLE FOR:

*Check for evidence of Financial Responsibility

1. Horn

2. Mirror

3. Steering

4. Brakes (system)

5. Tires

6. Wheel Assembly

7. Exhaust System

8. Tail Lamps (1)

9. Stop Lamp (1)

10. License Plate Lamp

11. Rear Red Reflector (1)

12. Head Lamp

13. Motor, Serial or Vehicle Identification Number

14. Steering Wheel

Definitions:

"Autocycle" means a motor vehicle other than a tractor that is:

(1) Designed to have when propelled not more than three wheels on the ground;
(2) Equipped with a steering wheel
(3) Equipped with seating that does not require the operator to straddle or sit astride the seat; and
(4) Manufactured and certified to comply with federal safety requirements for a motorcycle.

4.5.9 INSPECT EVERY MOTORCYCLE AND MOTOR-DRIVEN CYCLE FOR:

*Check for evidence of Financial Responsibility.

1. Horn

2. Mirror

3. Steering

4. Brakes (system)

5. Tires

6. Wheel Assembly

7. Exhaust System

8. Tail lamps (1)

9. Stop Lamp (1)

10. License Plate Lamp

11. Rear Red Reflector (1)

12. Head Lamp (1)

13. Motor, Serial or Vehicle Identification Number

Definitions:

Motorcycle: Every motor vehicle having a saddle for the use of the rider and designed to propel itself with not more than three wheels in contact with the ground but excluding a tractor.

Motor-Driven Cycle: Every Motorcycle with a motor which has an engine piston displacement of not more than

250cc.

4.5.10 INSPECT EVERY MOPED FOR:

*Check for evidence of Financial Responsibility

1. Brake
2. Head Lamp
3. Rear Reflector
4. Rear Lamp

Definition of a Moped:

Moped means a motor-driven cycle whose speed attainable is one mile is not more than 30 mph and that produces not more than two-brake horsepower. If an internal combustion engine is used, the displacement may not exceed 50cc and the power drive system may not require the operator to shift gears.

4.5.11 INSPECT EVERY SCHOOL BUS FOR:

*Check for evidence of Financial Responsibility
– unless government owned. CNG tank expiration (if equipped) and/or documentation.

1. Horn
2. Windshield Wipers
3. Mirror
4. Steering
5. Seat Belts (driver only)
6. Brakes (system) Parking – (beginning with 1960 models)
7. Tires
8. Wheel Assembly
9. Exhaust System
10. Exhaust Emissions System (beginning with 1968 models)
11. Beam Indicator (beginning with 1948 models)
12. Tail Lamps (2)
13. Stop Lamps (2)
14. License Plate Lamp

15. Rear Red Reflectors (2)

16. Turn Signal Lamps

17. Clearance Lamps

18. Side Marker Lamps

19. Side Reflectors

20. Red Warning Lamps (2 front – 2 rear – alternately flashing)

    School bus RED signal lamps mounted as high and as widely spaced laterally as practicable, which should be capable of displaying to the front, two alternately flashing RED lights located at the same level AND to the rear, two alternately flashing RED light located at the same level. These lights should have sufficient intensity to be visible at 500 feet in normal sunlight. These lamps are intended to identify a vehicle as a school bus and to inform other users of the highway that such vehicle is stopped on the highway to take on or discharge school children. Some school buses may be equipped with 8 warning signal lamps, 4 red and 4 amber, working in an automatic integrated system. This system of alternately flashing warning lamps will be accepted provided it has 2 red lamps on the front and 2 red lamps on the rear.

21. Signs ("SCHOOL BUS" 8 inches in height on front and rear of the bus)

22. Fire Extinguisher (one quart chemical and conveniently located for immediate use)

23. Head Lamps (2)

24. Exterior Crossover Mirror (Convex)

    a. One or more exterior (crossover) mirror of convex design mounted at or near the front of the school bus and adjustable to give the driver, at all times when seated in the driver's seat, a clear view of the ground or roadway immediately ahead of the front bumper and beside the front wheels of the school bus. Crossover mirror(s) is required on all school buses no matter what the design of the bus.

25. Motor, Serial, or Vehicle Identification Number

26. Gas caps on gasoline powered vehicles 2 thru 24 model years old

27. Inspect for applied window tinting

Definition of a School Bus:

Every motor vehicle that complies with the color and identification requirements set forth in the most recent edition of standards as produced and sponsored by the National Commission of Safety Education of the National Education Association, Washington, D.C., and being used to transport children to or from school or in connection with school activities, not including bused operated by common carriers in urban transportation of schoolchildren.

Inspect School Buses For and Reject If:

1. All equipment required by size, weight, or class of the vehicle does not meet requirements.
2. "School Bus" signs are not present, readable, and of proper height.
3. Fire extinguisher is not of required capacity, proper type, or in good condition and properly located.

4. School bus RED signal lamps are not present, properly working, and in good condition.
5. Crossover mirror mounting is loose or will not adjust to different positions or will not hold firm after adjustment.
6. Crossover mirror offers unsafe interference with driver's forward vision or hides wither front turn signal from view of oncoming driver.
7. Crossover mirror's reflective surface is cracked, broken, peeled, or tarnished, or has sharp edges.

04.10.0 PRIOR TO INSPECTION

A. The owner or operator of a vehicle shall present evidence of Financial Responsibility to the inspection station in one of the following ways:

1. A liability insurance policy, or a copy of the policy, in at least the minimum amounts required by law.

2. A standard proof of liability insurance form for personal vehicles promulgated by the Texas Department of Insurance and issued by a liability insurer that included (**Commercial Fleet Insurance Policies do not have to contain (d) or (f)**):

a. the name of the insurer;
b. the insurance policy number
c. the policy period (dates of coverage must be 30 day minimum);
d. the name and address of each insured person;
e. the policy limit or a statement that the coverage of the policy complies with at least the minimum amounts of liability insurance required by the Act; and
f. the make and model of each covered vehicle.

3. An insurance binder that confirms that the owner and/or operator is in compliance. This would include temporary insurance cards issued by insurance companies until the permanent card is sent to the policyholder. These temporary cards should have a start/end date, policy number, vehicle information, and are usually valid for 30 days.

4. A copy of a certificate issued by the Department of Public Safety that shows that the vehicle is covered by self-insurance.

5. A certificate (or copy) issued by the State Comptroller that shows that the owner of the vehicle has on deposit with the treasurer money or securities in at least the amount required by law.

6. A certificate (or copy of certificate) issued by the Department of Public Safety that shows that the vehicle is a vehicle for which a bond is on file with the Department.

7. A copy of a certificate issued by the County Judge where the vehicle is registered that shows that the owner has on deposit, cash or a cashier's check in at least the amount required by law.

8. Evidence of Financial Responsibility must be furnished for the TOWING VEHICLE of any trailer, semitrailer, or pole trailer presented for inspection.

9. A Non-owner's policy is not acceptable as evidence of Financial Responsibility.

10. Proof of Financial Responsibility from another state is acceptable if it meets Texas liability requirements.

11. An electronic image displayed on a wireless communication device that includes the information required on the standard proof of liability insurance form, or the other proof of Financial Responsibility documents listed above, as provided by the liability insurance provider is acceptable as Evidence of Financial Responsibility.

B. A Vehicle Inspection Report may not be issued for a vehicle for which the owner or operator fails to furnish the required evidence of Financial Responsibility.

C. Vehicles exempt from the Financial Responsibility requirement are:

1. Government vehicle (U.S., State-Texas, county, city, or other political subdivision.
2. Vehicles registered to volunteer fire departments.
3. Antique or former military vehicles not used for regular transportation.

4.15.1 INSPECTION REQUIREMENTS

Every vehicle which is registered in this state and operated on the highways of this state is required to be inspected.

4.15.2 Vehicle Exempt from Inspection.

1. Equipment:
   a. Road-Building Equipment
   b. Farm Machinery
   c. Trailers
   d. Semitrailers
   e. Pole Trailers
   f. Mobile Homes
   g. Any vehicle required to display a Slow- Moving Vehicle Emblem

   ***When actual gross weight or registered gross weight is 7,500 pounds or less.**

2. A vehicle with one of the following type Texas license plates:

   a. Paper Dealer Demonstration/In-transit/Convertor Tag
   b. Parade License
   c. Former Military Vehicle License
   d. In-Transit License
   e. Machinery License
   f. Disaster License
   g. Farm Trailer License
   h. Permit License
   i. Antique License
   j. Charitable Organization License
   k. Custom Vehicle License
   l. Street Rod License

3. A vehicle with one of the following Texas permits:

a. Vehicle Temporary Transit Permit
b. One-Trip Permits
c. Temporary 24-Hour Permits
d. Prorate Tabs

4.15.3 General Inspection Requirements

1. City, county, state or federally owned vehicles, if licensed with Texas plates, require inspection and they must meet the same requirements of any other vehicle of that same if that same size, weight, etc. (Example: Fire Trucks, ambulances, police vehicles, and others; except that these vehicles are exempt from evidence of Financial Responsibility requirements.) (See 04.10.00)

2. When inspection trailers, semitrailer, pole trailers, and mobile homes, these vehicles will be considered a separate vehicle whether used in connection with a motor vehicle or not and will require a separate inspection. A separate fee shall be charged for each vehicle inspected.

3. Each inspection shall be a complete inspection performed by a certified inspector and shall include a check of all the items in the Vehicle Inspection Operations and Training Manual, except that a reinspection of a rejected vehicle by the same station within 15 days of the initial inspection that resulted in rejection need only check the items previously found defective, unless any other obvious defects are noted, A vehicle with no evidence of Financial Responsibility will be refused inspection and no fee will be charged. Once the inspection a vehicle has begun, it must be completed whether or not the vehicle is passed or rejected.

4. All inspections must be made only in the approved inspection areas at the location approved by the Texas Department of Public Safety.

5. All inspectors shall be certified by the Texas Department of Public Safety. If a certified inspector changed their place of employment, the Department representative must be notified immediately. Each inspection shall be performed by a properly certified inspector if:

a. a certified vehicle inspector changes their place of employment, the inspector must prove their ability to correctly operate the testing equipment at the new vehicle inspection station.
b. a certified vehicle inspector changes their place of residence, the inspector must notify the Department of their new permanent street address within 30 days of the dare of the change.
c. a certified vehicle inspector changes their name, the inspector must notify the Department of their new name within 30 days of the date of change.

6. Inspection may be made while it is raining or snowing. Care must be exercised when making inspection during inclement weather. Road (brake) tests will be permitted with due care when it is raining or when braking surfaces are wet. No road (brake) tests are permitted on icy road test areas.

7. Refusing to inspect a vehicle submitted for inspection without sufficient cause or the careless inspection and willful violation of inspection requirements may result in suspension of the Certificate of Appointment and possible court action.

8. Vehicle not registered in the state of Texas may be inspected, and issued a Vehicle Inspection Report if they meet Texas' requirements, including evidence of Financial Responsibility.

9. Complete Vehicle Identification Number or serial number shall be listed on the Vehicle Inspection Report.

10. Public Station: A station, open to the public performing inspection on vehicles presented by the public.

11. Fleet Station: A station not providing vehicle inspection services to the public.

12. Government Station: A statin operated by a political subdivision, or agency of this State.

13. Each Official Vehicle Inspection Station must inspect every vehicle (according to endorsement) presented for inspection as prescribed by the rules and regulations, whether rejecting or approving it. A vehicle rejected by one inspection station may be reinspected by another inspection station if the vehicle owner desires to have this done, and is willing to pay an additional fee.

14. Reports of violations of the Vehicle Inspection Act or of those rules and regulations will be investigated. When such reports are found to be justified they may result in the suspension of the inspector or station, possible court action, or other appropriate action. Repeated violations or serious violation may result in the revocation of the appointment by the Department or action against the certified inspector or station.

15. The term "inspection" as herein used shall not include repairs or adjustments. Repairs or adjustments necessary to bring the vehicle into conformity with these regulations may be made by agreement between the vehicle owner and such inspection station or whatever repair shop the vehicle owner may select.

16. All vehicles owned by the federal government shall be exempt from all provisions of the Vehicle Inspection Act or rules and regulations, except those which are registered in Texas and display Texas registration plates.

17. The Department of Public Safety extends the time within which an inspection shall be obtained by a resident owner or operator of a Texas-registered vehicle, when the vehicle has no valid inspection. The extension will be granted only on the first occasion of operation in this state during an inspection year and only until the resident owner or operator of the vehicle has arrived at his home, station, or destination in this state and for three days thereafter.

18. Each vehicle that meets the requirements set forth in these regulations shall be issued a Vehicle Inspection Report signed by the inspector. Those vehicles that do not meet the inspection requirements must be issued a Vehicle Inspection Report rejection receipt.

4.15.4 Foreign Vehicles

A. The inspection of vehicles applies to foreign-made motor vehicles as well as American-made motor vehicles. However, there are some foreign-made vehicles that cannot be inspected in the usual manner. Therefore, when inspecting those foreign-made vehicles, you are authorized to follow the Department's recommendation for inspection and to reject any vehicle for an item that is worn, missing, broken, or defective in any manner that exceeds the Departments tolerance for replacement. Many of these vehicles are not export models and, therefore, are equipped withlighting and other devices that do not meet standards adopted by the Texas Department of Public Safety. All devices must meet applicable Department standards. In cases where those devices do not comply with the inspection requirements, legal devices must be installed. Head lamps on those vehicles must be of a type acceptable by the Department before a passing Vehicle Inspection Report can be issued.

B. Texas requires that all safety and emissions components for that model year be installed and operational. Check with the vehicle manufacturer as to what was required in the United States for that year model. Vehicle importation is the responsibility of the U.S. Customs and Border Protection. The critical point in vehicle importation is whether the vehicle meets the Federal Motor Vehicle Safety Standards (FMVSS) established by the National Highway Traffic Safety Administration (NHTSA). Emissions equipment and lighting equipment are common problem areas.

4.15.5 All-Terrain Vehicle

1. All-Terrain Vehicle (ATV) shall not be inspected regardless of how equipped. This class vehicle is not designed for use on public roads.

4.15.6 Unique Vehicles. (Reconstructed/Rebuilt Vehicle, Engine Swaps, Kit Cars, Miniature Motorcycles)

A. Reconstructed/Rebuilt Vehicles. All vehicles used on the public highways are required to meet all of the state equipment laws and requirements; therefor, reconstructed or rebuilt vehicles which are using the public highways are also expected to meet all of the state equipment laws and regulations. Reconstructed or rebuilt vehicles in many instances fail to meet state requirements and therefor, are not legal for use on the public highways.

All reconstructed or rebuilt vehicle (sans or dune buggies or hot rods) must comply with inspection requirements for the class of motor vehicle it is being inspected as, such as a car, truck, motorcycle, or motor-driven cycle. Be sure to check reconstructed or rebuilt vehicles for all required items of inspection with particular attention to the lighting devices. Head lamps shall be of a type acceptable by the Department. No modifications are allowed that will change the original design or performance of any lamp. Only acceptable automobile head lamps may be used on cars and trucks. Wither the 7-inch head lamps or both dual head lamps (type 1 and type 2) may be used. Only acceptable motorcycle head lamps may be used on motorcycles, motor-driven cycles, and mopeds.

All lighting devices must be of an acceptable type that meet Department standards and must comply with the mounting heights as specified in the inspection requirements.

The year model of a reconstructed vehicle will be the same year in which it was reconstructed and not the year of original manufacture. Therefore, the inspection requirements would be for the model year of the vehicle (same as the year of reconstruction) or the year model of the engine itself, whichever is the later model. Motor vehicles used for competitive racing, such as modified stock cars, dragsters, and hot rods may be inspected. When such a vehicle is presented for inspection, all rules and regulations regarding the inspection the vehicle will apply. This applies to brake requirements, exhaust systems, as well as any other item required in these provisions.

B. Engine Swaps. The simple rule is that a vehicle must have all emission components that were present when it was manufactured. A replacement engine can be installed if: (1) the design of the replacement engine has received prior approval of the EPA; (2) the design of the replacement engine is compatible with the vehicle chassis such that all applicable pollution control systems and devices are properly installed and operable; and (3) the resulting vehicle is identical with regard to all emission related parts and emission related engine design parameters and calibration, to the same or a newer model year, as originally equipped.

C. Kit Cars. Vehicles are required to meet emissions standards (i.e. catalytic converter, oxygen sensors, exhaust gas recirculation, evaporative emissions, etc…) for the year the vehicle is assembled in order to pass a safety inspection. Vehicle manufacturers have to certify their vehicle meet EPA emissions standards. Just as the EPA does not allow an individual to reverse engineer a vehicle to defeat emission standards, they do not allow an individual to build a brand new "old" vehicle to bypass emissions standards. It is possible if you use older parts (like a 1965 engine, or complete 60's frame and power train) that the vehicle will be registered as that model year (replica), but that is determined by the Texas Department of Motor Vehicles. An inspection station shall follow the model year registration classification of the vehicle in determining the inspection criteria for that particular vehicle. The Texas Department of Motor Vehicles has a custom vehicle and street rod license plate program that may be of assistance in licensing a kit car. The Texas Department of Motor Vehicles is responsible for issuing a certificate of title, registration, and establishing a safety inspection program for custom vehicles and street rods.

D. Miniature Motorcycles. Miniature motorcycles are illegal to operate on public roadways. Miniature motorcycles, also known as pocket biked or pocket rockets, can only be operated on private property. Miniature motorcycles do not

meet the equipment standards under both federal and state law; therefore they cannot be registered or inspected.

E. Neighborhood Electric Vehicles. (TRC 551.301-303). A "Neighborhood Electric Vehicle" means a vehicle that can attain a maximum speed of 35 miles per hour on a paved level surface and otherwise complies with Federal Motor Vehicle Safety Standard 500 (49 CFR 571.500). A neighborhood electric vehicle (NEV) may be operated only on a street or highway for which the posted speed limit is 45 mile per hour or less. A NEV is a motor vehicle that:

- is originally manufactured to meet, and meets, the equipment requirements and safety standards established in Federal Motor Vehicle Safety Standard 500
- Has four wheels
- does not have to be powered by electricity (other power sources, such as gasoline are acceptable)
- is capable of attaining a speed of more than 20 miles per hour but not more than 35 miles per hour, and
- is not a golf cart designed primarily for transporting persons on a golf course

A NEV is required to be titled in order to be registered for operation on public roads. The registration classification of a NEV will be a passenger vehicle (Passenger Vehicle plate). A NEV requires the same Financial Responsibility or liability insurance as any other motor vehicle operated on the public roadways and a 17 digit VIN.

A NEV shall be equipped with:

- Headlamps
- Front and rear turn signal lamps
- Tail Lamps
- Stop Lamps
- Reflex reflectors (one red on each side as far to the rear as practicable, and one red on the rear)
- Exterior mirror mounted on the driver's side of the vehicle and with and exterior mirror mounted on the passenger's side of the vehicle or an interior mirror
- Parking brake
- Windshield that conforms to FMVSS on glazing materials (49 CFR 571.205)
- Seat belt assemblies at each designated seating position.

A NEV that is not required to display a Slow- Moving Vehicle Emblem and is registered as a passenger vehicle by TxDMV will not be required to be inspected.

F. Low Speed Vehicles (TRC 551.401-405). A Slow-Moving Vehicle means a motor vehicle designed to operate at a maximum speed of 25 miles per hour or less. A slow-moving vehicle emblem in accordance with TRC 547.703. Low Speed Vehicle would include vehicles such as golf carts and certain utility vehicles. A low speed vehicle is required to display a slow-moving vehicle emblem when it is operated in a public highway in accordance with TRC 547.703(d). TRC 548.052 states that a vehicle required to display a slow-moving vehicle emblem is not subject to inspection.

4.15.7 Multi-Purpose Vehicles.

Multi-purpose passenger vehicle means a motor vehicle with power, except a trailer, designed to carry 10 persons or less which is constructed either on a truck chassis or with special features for occasional off-road operation. Lighting requirements for this type vehicle would refer to diagrams of similar type vehicles such as bus or van-type truck. The type of registration plate is not a determining factor in the number of lighting devices required for inspection purposes.

4.15.8 Compressed Natural Gas. (CNG)

Compressed Natural Gas (CNG) Fuel Systems have been added as an item of inspection. CNG Fuel systems must comply with the requirements of 49 CFR 571.304. The expiration date of the fuel container has not been exceeded.

4.15.9 Unsafe Vehicles.

It is a violation of Transportation Code, Section 547.004 (a) for any person to operate or move on any highway any vehicle unless the equipment upon any and every said vehicle is in good working order and adjustment as required in this Act and said vehicle is in such safe mechanical condition as not to endanger the driver or other occupant or any person upon the highway. It is also a violation for any person to operate or move or for the owner to cause or to permit to be moved on the highway any vehicle which is in unsafe condition as to endanger any person, or which does not contain those parts or is not at all time equipped with such lamps and other equipment in proper condition and adjustment as required by law, or which is equipped in any manner in violation of the law, or for any person to do any act forbidden or fail to perform any act required by law.

4.15.10 Special Lighting Devices and Reflector Requirements:

The law described certain lamps and reflectors that certain vehicles must have regardless of whether or not those vehicles are operated at night. The law further states that when these vehicles are operated at night all of these prescribed lamps must be operational.

Any lighting device, lens and/or reflector used on a vehicle must meet standards adopted by the Texas Department of Public Safety for that particular use.

Whenever a requirement is declared as to the mounting height of lamps or devices, it shall mean from the center of such lamp or device to the level ground upon which the vehicle stands when such vehicle is without a load. Whenever a requirement is declared as to visibility distance from which certain lamps and devices shall render objects visible or within which such lamps or devices shall be visible, these provisions shall apply at nighttime in respect to a vehicle without a load when upon straight, level, unlighted highway under normal atmospheric conditions unless a different time or condition is expressly stated.

REJECT ANY VEHICLE PRESENTED FOR INSPECTION WHICH IS NOT EQUIPPED WITH ALL THE LAMPS AND DEVICES PRESCRIBED REGARDLESS OF HOW AND WHEN THE VEHICLE IS OPERATED.

4.15.11 Commercial Motor Vehicle Inspection Program.

The term "commercial motor vehicle" means a self-propelled or towed vehicle, other than a farm vehicle with a gross weight, registered weight, or gross weight rating of less than 48,000 pounds, that is used on a public highway if:

1. The vehicle or combination of vehicles has a gross weight, registered weight, or gross weight rating of more than 26,000 pounds (**excluding the occasional transportation of personal property by individuals not for compensation or in the furtherance of a commercial enterprise, such as a recreational vehicle**); or

2. The vehicle is a farm vehicle with a gross weight, a registered weight, or a gross weight rating of more than 48,000 pounds; or

3. The vehicle is designed to transport more than 15 passengers, including the driver; or

4. The vehicle is used to transport hazardous materials in a quantity requiring placarding by a regulation issued under the Hazardous Materials Transportation Act; or

5. The vehicle or combination of vehicles has a gross weight rating of more than 10,000 pounds and is operated in

interstate commerce and registered in this state.

6. The vehicle is a school bus that will operate at a speed authorized by the Texas Transportation Code: or

7. The vehicle is a school activity bus that has a gross weight, registered weight, or **gross weight rating of more than 26,000 pounds, or is designed to transport more than 15 passengers, including the driver.**

8. Refer to Chapter 6 of the Vehicle Inspection Operations and Training Manual for the requirements of the Texas Commercial Vehicle Inspection Program.

4.20.1 INSPECTION ITEM CRITERIA

All items of inspection enumerated are required to be inspected in accordance with the Texas Transportation Code, Chapter 548, and these rules and regulations prior to issuing a Vehicle Inspection Report.

During the brake test of a vehicle requiring a Commercial Driver License (CDL), the certified inspector may ride in the vehicle driven by its operator observing the braking performance at the brake test area, if the inspector is not licensed to operate the class of vehicle presented for inspection.

Any vehicle presented for inspection that is modified for use by a disabled person may be driven by the operator with the certified inspector riding and observing during the brake test portion of the inspection.

4.20.2 Compressed Natural Gas (CNG)

After verifying vehicle insurance, CNG tank should be inspected with the vehicle owner present.

1. Inspection Procedure.

Visually inspect label or documentation that the expiration date of the fuel container has not been exceeded and that it was manufactured in accordance with 49 CFR 571.304.

2. Inspect and reject if:

a. The CNG Fuel Container was not manufactured in accordance with 49 CFR 571.304.
b. The CNG Fuel Container has exceeded its expiration date.
c. Compliance with 49 CFR 571.304 cannot be determined through observation or documentation.
d. Fleet operator does not provide documentation that the fleet operator employs a certified installer or inspector for CNG Fuel System, unless compliance can be determined by reviewing the CNG label affixed to the vehicle or from documentation provided by the original equipment manufacturer or from a certified CNG installer or inspector.

3. If the CNG Fuel system does not pass the inspection, the inspection process shall not proceed any further. The inspector should advice the owner operator of the vehicle the reason for the failure. A failing Vehicle Inspection Report is not required to be completed.

4.20.3 Beam Indicator.

Every new motor vehicle registered in this state after January 1, 1948, other than a motorcycle or motor-driven cycle, which has multiple beam rod lighting equipment, shall be equipped with a beam indicator (no certain color required) which shall be lighted whenever the uppermost distribution of light from the head lamp is in use, and shall not be

otherwise lighted. Said indicator shall be so designed and located that when lighted it will be readily visible without glare to the driver of the vehicle so equipped.

1. Inspection Procedure.

Check operation and condition visually.

2. Inspect and reject if: (When required)

a. Vehicle not equipped with a beam indicator.
b. Improper switching indication
c. Produces a glaring light.
d. Inoperative for any reason.

4.20.4 Brakes.

Every passenger car, truck, school bus, motorcycle and autocycle shall be equipped with brakes acting on all wheels except:

1. Motor-Driven cycles, motor scooters, motorcycle sidecars, or mopeds.

2. Trucks and truck tractors (manufactured prior to 1981) having three or more axles need not have brakes on the front wheels, except that when such vehicles are equipped with at least two steerable axles, the wheels on one steerable axle need not have brakes. However, such trucks and truck tractors must be capable of complying with the performance requirements of this Act.

3. Any vehicle being towed in a driveaway or towaway operation, provided the combination of vehicles is capable of complying with the brake performance requirements, does not require brakes acting on all wheels.

Definition of Terms:

Brake System: A combination of one or more brakes and their related means of operation and control.

Service Brake System: A brake system used for retarding, stopping, and controlling the vehicle under normal operating conditions. This brake is sometimes referred to as "foot brake."

Parking Brake System: A brake system used to hold and maintain the vehicle in a stationary position. A positive mechanical means is employed to hold the brake applied when the vehicle is unattended.

Pedal Reserve: As applied to hydraulic, mechanical, or power assisted hydraulic brakes, this is the amount of distance (total pedal travel) left in reserve when the pedal is depressed to the brake-applied position. The purpose of the pedal reserve check is to ascertain the degree of the brake adjustment and to demonstrate satisfactory brake actuating system condition.

Equalization: Brakes shall be so adjusted as to operate as equally as practicable with respect to the wheels on the opposite sides of the vehicle.

Driveaway-Towaway Operation: Any operation in which any motor vehicle, trailer, or semitrailer, singly or in combination, new or used, constitutes the commodity being transported when on set or more of wheels of any such vehicle are on the roadway during the course of the transportation, whether or not such vehicle furnishes the motor power.

4. Inspection Procedure.

Service brake performance tests should be conducted on a substantially level, hard, smooth surface road or area that is free from loose material, oil or grease. Using the service brake only, the stopping ability of the vehicle should be tested by one of the following methods.

4.20.5 Service Brake Test Methods.

1. On Road (Decelerometer): Mount an approved decelerometer at centerline of vehicle. Level the decelerometer. At a speed of 20 mph apply the service brake firmly. Observe decelerometer reading.

2. On Road (Brake Test Area): At a speed of 20 mph apply service brakes firmly. Observe whether a vehicle comes to a smooth stop within the distance prescribed by the chart, "Required Brake Performance." Inspector should have firm control of the steering wheel throughout the test.

3. Platform-Type Tester: Drive vehicle onto "drive-no-and-stop" platform tester. Apply brakes firmly at a speed from 4-8 mph without wheel lockup. All braking action must take place on the platforms.

Front-wheel drive vehicles are to be checked by road test only unless a platform tester specifically approved by the Department to test front-wheel drive vehicle is used. These machines may be used to inspect the relative effectiveness of each wheel. There should be braking action on all wheels and the action on any one wheel should be 75 percent or more of the action on the other wheel on the same axle.

4. Roller-Type Brake (Dynamometer-Force Measuring Type):

   a. Adjust tire inflation to recommended values.
   b. Position vehicle on dynamometer rolls and begin test.
   c. Follow Department's recommended testing procedures.

5. Test Brake Hydraulic System for Leakage

   a. While the vehicle is stopped, depress brake pedal under moderate foot force (40-60 pounds in non-powered systems and 15-20 pounds in power assisted systems).

6. Test Pedal Reserve

   a. While the vehicle is stopped, depress brake pedal under moderate foot force (40-60 pounds in non-powered systems and 15-20 pounds in power assisted systems.

7. Condition of Vacuum System

   a. Visually inspect system for collapsed, broken, badly chafed and improperly supported hosed and tubes, and loose or broken hose clamps.

8. Electric Brake System. (Trailers) (Ammeter)

1. Insert a low-range dc ammeter into the brake circuit between the controller and the brakes.

2. With controller in "off" position. Ammeter should read zero.

3. Gradually apply controller and observe maximum ammeter reading and current modulation.

4. Gradually return controller to “full off” and observe return to zero ampere and current modulation.

5. Divide maximum ammeter reading by number of brakes.

Check for loose or dirty connections and for broken, frayed or unsupported wires.

4.20.6 Brake Test Procedures.

If a road test is used for checking service brakes:

1. Brake test area must be used on every inspection made.

2. When it is raining, snowing, or when the brake surfaces are wet, brake tests are permitted; however, if the certified inspector feels that they cannot safely and with due care accurately check the service brakes they may refuse to make the inspection.

3. No inspections are permitted when the brake test areas are icy.

4. Extreme care must be exercised and sudden stops must be avoided if other traffic is affected.

5. All vehicles so tested (brake test area) should be driven at a speed of 20 miles per hour and the vehicle must stop as indicated by the stopping distance chart. (See the Brake Performance Chart in Reference Section 04.30.06.)

6. The brake application must be started as close to a speed of 20 miles per hour as possible. The stopping distance is to be measured from the point at which the service brake pedal or control begins. The vehicle must stop within the prescribed stopping distance requirements and must not pull to the right or left. Using the service (foot) brake only, the stopping ability of the vehicle should be tested by actual operation of the vehicle.

7. When applying brakes to the moving vehicle, the braking force must be evenly distributed to the wheels. The brakes should be so adjusted as to operate as equally as practicable with respect to the wheels on the opposite sides of the vehicle. The driver should have a firm control of the steering wheel throughout the test.

8. Brakes on a truck-tractor may be inspected without a trailer; however, a trailer shall be inspected only with a towing vehicle attached.

9. Approved brake machines may be used for testing brakes so long as the machine and the braking surfaces afford a competent brake test.

10. All testing of service brake for stopping distance and equalization must be done either by an actual road test or by a machine.

11. If a platform-type tester is used, a measured brake test area must also be maintained to test vehicle with more than two (2) axles or vehicle with front-wheel drive, unless, the tester has been specifically approved by the Department to test these types of vehicles.

4.20.7 Platform-Type Tester.

This type of brake tester is a drive-on-and-stop machine consisting of 4 pads or platforms, one for each wheel. When the brakes are applied at the time the vehicle is moving on the pads, the braking effort at each wheel caused a proportionate movement of the pad against the measuring system. All brake action must take place on the platforms.

1. Operation

a. Drive vehicle on brake tester about 5 miles per hour and apply the brakes firmly but not severely. (Excessive speed and braking should be avoided).
b. These machines may be used to inspect the relative effectiveness of each wheel. There should be braking action on all wheels.
c. Each gauge will record the individual wheel braking effort in hundreds of pounds.
d. Total braking effort and comparative braking energy can be determined.
e. The tester must be properly installed, maintained, and kept clean at all times.
f. If the vehicle fails the first brake test, a second brake test must be conducted before the vehicle is rejected.

2. Equalization and tolerances:

a. Total reading must not be less than 50% of the total weight of the vehicle if the vehicle has brakes on all wheels. The required 50% is the equivalent of a vehicle stopping within 25 feet at 20 miles per hour.
b. Total reading must not be less than 35% of the weight of the vehicle if the vehicle does not have brakes on all wheels. The required 35% is the equivalent of a vehicle stopping within 39 feet at 20 miles per hour.
c. Brake machine readings on each opposing wheel of the same axle shall be within 25% on the front and within 35% on the rear axle.

3. Conditions affecting break tester readings;

a. Wet tires or wet tread plates (pads) will cause reading of braking efficiency to be inaccurate.
b. Grease, sand, or other foreign material on tires or tread plates (pads) will also cause readings of braking efficiency to be inaccurate.
c. Worn or slick tires will not affect brake tester as much as they will affect a road test.
d. Dirt and debris under the tread plates (pads).

4.20.8 Roller-Type Tester.

This type brake tester (Dynamometer [Force Measuring Type]) is equipped with powered rollers that rotate the wheels at a speed of approximately 35 to 45 miles per hour with the vehicle in a stationary position. The brakes are applied while the wheels are turning and developing braking force. Measurements of both BRAKING FORCE (Brake Effort) and BRAKE BALANCE are indicated on the gauge9s0s. Brake fade can also be tested on this machine.

1. Operation – Acceptance Tests. With tester in operation and wheels turning, apply brakes slowly until brake effort teaches the following values and hold for 5-6 seconds:

a. Small vehicle up to 2,200 pounds – 175 lb. Brake Effort/Wheel (Total 350 pounds)
b. Light compacts 2,300 to 3,000 pounds – 230 lb. Brake Effort/Wheel (Total 460 pounds)
c. Heavy compacts 3,100 to 3,600 pounds – 285 lb. Brake Effort/Wheel (Total 570 pounds)
d. All others over 3,700 pounds – 355 lb. Brake Effort/Wheel (Total 670 pounds)
e. Brake Balance Test – During the "Brake Force Test," variance in braking force between wheels should not exceed 70 pounds.

2. As additional service to the vehicle owner or operator, the inspection station is permitted to perform an additional dynamic brake inspection according to recommendations of the equipment manufacturer. However, legal reject must be based on the above parameters under "Operation
– Acceptance Tests."

a. If substandard brake conditions are found that are not exposed by the above acceptance test, the inspection

station may suggest that the brake repairs be made but must clearly inform the vehicle owner or operator that such repairs are not mandatory to pass inspection.

4.20.9 Decelerometer-Type Tester.

This tester is an inertia-type Decelerometer consisting of a scale to measure the vehicle's deceleration or equivalent braking force (sometimes referred to as brake efficiency in percentages. The Decelerometer is generally placed as close to the center of the vehicle as practicable (on window of right front door) and the vehicle is operated on the highway outside the inspection station.

1. Operation

   a. Level Decelerometer and set to "(0)."
   b. Drive vehicle on a clean, level road (road grade of 5% or less) at 20 mph and apply brakes evenly, without skidding vehicle wheels.
   c. Read the dial to see if vehicle stopped within required stopping distance for class of vehicle.
   d. For brake balance (equalization), the vehicle should stop in a straight line. A pull to wither side, right or left, during a test stop indicates brake unbalance.

2. Conditions affecting brake tester readings:

   a. Wet tires and highways may cause readings of braking efficiency to be inaccurate.
   b. Oil slicks, sand or other foreign material on tires or highways may also cause readings of braking efficiency to be inaccurate.
   c. Worn or slick tires may also cause reading to be inaccurate.
   d. Any fast, hard application of the brake can cause wheel lockup and tire skid.

4.20.10 Autocycle, Motorcycle, Motor-Driven Cycle, and Moped Brake Requirements.

Every autocycle, motorcycle, motor-driven cycle, and moped, at all times and under all conditions of loading, upon application of the service brake pedal or control, shall be capable of:

1. Developing a brake force that is not less than 43.5% of its gross weight, OR
2. Decelerating to a stop from not more than 20 miles per hour at not less than 14 feet per second, OR
3. Stopping from a speed of 20 miles per hour in not more than 30 feet, such distance to be measured from the point at which movement of the service brake pedal or control begins.
4. Autocycles and motorcycles shall be provided with adequate brakes on all wheels. Sidecars are not required to have brakes when braking performance of the motorcycle or motor-driven cycle is met. Motor-driven cycles and mopeds are required to have brakes on at least the rear wheel. During the brake road test, an autocycle, motorcycle motor-driven cycle, or moped may be driven by its owner or operator with certified inspector observing the braking performance at the brake test area if the certified inspector is not licensed to operate a motorcycle, motor-driven cycle, or moped.

4.20.11 Inspect Service Brakes for and reject if:

a. Vehicle is not equipped with required service brakes.
b. Upon first application, there is less than 2 inches of pedal reserve as determined by the use of an accurate measurement of the full applied brake pedal of vehicle equipped with conventional brakes.
c. Upon first application, there is less than 1 inch of pedal reserve as determined by the use of an accurate measurement on the full applied brake pedal of vehicles with power brakes (power must be on and operating when tested).

d. On service brakes that cannot be checked with the use of an accurate measurement, there is less than a reserve of one-third of the total travel distance of the brake actuator.
e. Brake pedal height cannot be maintained under moderate foot force (40 to 60 pounds for conventional – 15 to 20 pounds for power) for a period of 1 minute.
f. There is visible leakage or audible seepage in hydraulic lines and cylinders, or any other part of the service brake system.
g. Fluid level in the master cylinder is more than 1 inch below the top of the reservoir or below manufacturer's recommended level.
h. Hosed or cables are restricted, abraded, crimped, cracked, leaking, frayed, or broken.
i. Brake rods or mechanical parts are missing, broken, badly worn, or misaligned.
j. Brake operating levers or control cables do not operate freely, improperly positioned, or misaligned.
k. Any part of the service brake system has been removed, disconnected, rendered inoperative.
l. There is obvious metal to metal contact sound when brakes are applied, and upon investigation, drum or disk is being scored.
m. The service brakes do not develop the required total braking force as determined by machine tests.
n. Brakes do not meet requirements for stopping distances for the class of vehicle.
o. The brakes are not equalized as determined from road testing or by machine test of the vehicle.
p. Red brake warning lamp or signal is on or comes on during test.
q. Anti-lock (ABS) lamp or signal which is on or comes on during test will not be cause for rejection.
r. It is imperative that brake system reservoir cover and the surrounding area be thoroughly cleaned before cover is removed for inspection to assure that NO DIRT OR WATER is mixed with the brake fluid.

4.20.12 Electric Brake System. (Trailers) (Ammeter)

1. Inspection Procedure.

a. Insert a low-range (0 to 25 amperes will be adequate for most two and four brake systems; 0 to 40 amperes may be required for a six brake system) DC ammeter into the brake circuit between the controller and the brakes. With controller in "off" position, ammeter should read zero. Gradually apply controller to "full on" position; observe maximum ammeter reading and current modulation. Gradually return controller to "full off" and observe return to zero ampere and current modulation. Divide maximum ammeter reading by number of brakes. Check for loose or dirty terminal connection and for broken, frayed, or unsupported wires.

2. Inspect for and reject if:

a. Trailers showing a per-brake maximum amperage value of more than 20% above, or less than 30% below, the brake manufacturer's maximum current rating.
b. Ammeter showing no reading, or needle indication not steady on application and release of brake controller.
c. Loose or dirty terminal connections; broken, frayed, or unsupported wires.
d. Trailers using single conductor or non- stranded wires or wires of a size below brake manufacturer's minimum recommendation.

4.20.13 Parking Brake

The inspection of the parking brake (auxiliary or holding) applies only to all motor vehicles beginning with the model year 1960. This does not include autocycles, motorcycles, motor- driven cycles, mopeds, trailers, semitrailer, pole trailers, and mobile homes.

Some types of parking brake may be actuated by foot or hand lever.

The parking brake may be assisted by the service brake or other source of power, provided that failure of the service brake actuating system or other power assisting mechanism will not prevent the parking brakes from being applied. The parking brakes should be so designed that when once applied- despite exhaustion of any source of energy or leakage of any kind. If the means of applying the parking brakes and the service brakes are connected in any way, they shall be so constructed that failure of any one part shall not leave the vehicle without operative brakes. Brake lock systems will not meet the parking brake requirement (i.e. placing the transmissions in park).

1. Inspection Procedure.

On a motor vehicle that has the automatic parking brake release when the transmission is placed in gear, the parking brake should be applied and the engine accelerated enough to cause a slight pull on the braking mechanism to determine if it is working properly.

2. Inspect Parking Brake for and reject if:

a. Motor vehicle is not equipped with a parking brake.
b. Operating mechanism, when fully applied, does not hold the vehicle. The service brake pedal or control, shall be capable of:
c. Actuating mechanism is not fully released when the release control is operated.
d. Any mechanical parts are missing, broken, badly worn, or not operating properly.
e. Pull cables are badly worn, stretched, frayed, or not operating freely.
f. Parking brake will not hold the vehicle in place when, with the engine running, the vehicle is place in forward gear and the engine is accelerated enough to cause a slight pull on the braking mechanism.

4.20.14 Vacuum Brake System

1. When checking the operation of the vacuum system on a truck or truck-tractor, the trailer shutoff valves must be closed. When checking the operation of the vacuum system on a trailer or semitrailer, the trailer must be coupled to a truck or a truck-tractor with the trailer shutoff valve open. The engine of the truck-tractor should be allowed to run for one minute to build up vacuum.

a. Visually inspect system for collapsed, broken, badly chafed, and improperly supported hoses and tubes, and loose or broken hose clamps.
b. On truck or truck-tractor, depress brake pedal with moderate foot force. While maintaining this force on the pedal, start engine, and observe if pedal falls slightly when engine starts.
c. On trucks with low vacuum indicators build full vacuum. Shut off engine and reduce vacuum by making a series of moderate brake application. A flashing or buzzing signal shall function when vacuum reaches weight inches mercury.
d. Apply and release pedal a number of times and observe actin on brake chamber rod on trailers.

2. Inspect for and reject if:

a. Hosed, tubes, or connection leaking, restricted, abraded, crimped, cracked, or broken; or collapse of vacuum hoses when vacuum is applied. Connecting lines not properly attached or supported to prevent damage or abrasion by contact with frame, axle, other lines, or any other part of the vehicle.
b. Evidence of leakage in the system.
c. In vacuum-assisted systems, service brake pedal does not move slightly as the engine is started while pressure is maintained on the pedal.
d. Trailer vacuum brake chamber rods not operating in conjunction with the tractor brake pedal, or not reaching full released position.

e. In vacuum-equipped vehicle in excess of 10,000 pound gross vehicle weight and vehicle combinations, insufficient vacuum reserve to permit three full service brake applications after engine is stopped.
f. Failure of low-vacuum indicator to function when system is reduced to eight inches of mercury vacuum.

4.20.15 Air Brake System

1. With air system charged, open drain cocks in each reservoir, carbon trap, or filter used in the air system; close drain cocks and with air system at zero gauge pressure, check pressure buildup, running engine at fast idle and record time to raise air pressure from 50 to 90 psi on the gauge. Check pressures at which light, buzzer, or flag connected to the low-pressure indicator is no longer visible or audible. Continue running engine until the governor cuts out and observe pressure-gauge reading. With engine idling, reduce pressure in system by making a series of brake applications and observe pressure at which governor cuts in. With system fully charged, stop engine and check for air leakage by recording the pressure drop in psi per minute both with brakes released and brakes fully applied. Inspect for restricted, abraded, collapsed, improperly supported, or broken hoses and tubes and audible leaks. Check safety valve for freedom of action. If the compressor is belt drive, check belt for tightness and observe belt condition. Check air compressor for air cleaner condition and restrictions.

2. Inspect for and reject if:

a. The time required to build up air pressure from 50 to 90 psi is more than 3 minutes with engine running at fast idle.
b. Warning device (light, buzzer, or flag) connected to the low pressure indicator of the air brake system not operating when air pressure is lowered to 55 psi.
c. Governor cut-in pressure lower than 80 psi or cut-out pressure higher than 135 psi, unless other values are recommended by the vehicle manufacturer.
d. Compressed air reserve insufficient to permit one full service brake application after engine is stopped, and with system fully charged, without lowering reservoir pressure more than 20%, below initial reading.
e. Air brake pressure drop of more than 2 psi in 1 minute for single vehicle or more than 3 psi in 1 minute for vehicle combinations, with engine stopped and service brakes released.
f. Air pressure drop of more than 3 psi in 1 minute for single vehicle or more than 4 psi in 1 minute for vehicle combinations with engine stopped and service brakes fully applied.
g. Hoses, tubes, or connections leaking, restricted, abraded, crimped, cracked, or broken. Connecting lines not properly attached or supported to prevent damage or abrasion by contact with frame, axle, other lines, or any other part of the vehicle.
h. Valves, diaphragms, or piston cups leaking audibly.
i. Air safety valve inoperative.
j. Compressor drive belt without sufficient tension, or badly worn or frayed.
k. Compressor air intake cleaner clogged sufficiently to prevent proper intake of air.

4.20.16 Clearance Lamps.

1. Required on all:

Buses 80 inches or more in overall width. Trucks and Truck-Tractors 80 inches or more in overall width. Trailers and semitrailers 30 feet or more in overall length. Pole trailers.

a. Clearance lamps, so far is practicable, be mounted on the permanent structure of the vehicle in such a manner as to indicate the extreme height and width of the vehicle. When identification lamps are present and are mounted as high as practicable, clearance lamps may be mounted at optional height. When mounting of front clearance

lamps results in such lamps failing to indicate the extreme width of the trailer, such lamps may be mounted at optional height but must indicate, as near as practicable, the extreme width of the trailer.

b. Clearance lamps and side marker lamps may be mounted in combinations, provided illumination is given as required by law.
c. Clearance lamps mounted on the front or on the sides near the front of a vehicle shall display an amber color.
d. Clearance lamps mounted on the rear of on the sides near the rear of a vehicle shall display a red color.
e. Clearance lamps shall be visible under normal atmospheric conditions at a distance between 500 feed and 50 feet from the vehicle on which mounted.
f. On buses, trucks and truck-tractors 80 inches or more in overall width and trailer and semitrailers 80 inches or more in overall width:

    1. On the front, two clearance lamps.
    2. On the rear, two clearance lamps.

2. Inspection Procedures:

Check operation and condition visually.

3. Inspect for and reject if:

a. Lamps are not present.
b. Lamps are not securely mounted and properly located.
c. Lamps do not emit required color; lens or bulb painted; or not steady burning.
d. Visibility requirements are not met.
   LED lights have less than 50% of the diodes illuminated.
e. Lens is discolored, or missing.
f. Wiring insulation is worn, rubbed bare, or shows any evident of burning, short circuiting, or poor electrical connections.
g. Lens is cracked or broken to the extent that a portion of the lens is missing and/or separated. Permitting light from the bulb to emit through the crack or break.
h. Lamp lenses repaired with repair tape or repair kit.
i. Lamps are not of equal intensity.
j. Any lamp assembly is cracked allowing water to enter or lamp assembly contains standing water.
k. Vehicles that are equipped and lighted by a red bulb will be rejected. (There are no red bulbs currently approved for use on vehicles.

4.20.17 Exhaust Emissions System.

The owner or operator of any new motor vehicle or new motor vehicle engine beginning with the model year 1968 equipped with an exhaust emission system shall maintain the exhaust emission system in good operable condition and shall use it at all time that the motor vehicle or motor vehicle engine is operated. The owner or operator of the motor vehicle or motor vehicle engine shall not remove or intentionally make inoperable with the State of Texas the exhaust emissions system or any part thereof, except where the purpose of removal of the exhaust emissions system or part thereof is to install another exhaust emission system or part thereof, which is intended to be equally effective in reducing atmospheric emissions from the vehicle or engine.

The exhaust emission system was installed by manufacturers of motor vehicles beginning with model year 1968. The inspection of the exhaust emissions system will apply only to those vehicles that are equipped with such a system. The following exhaust emissions systems will be inspected if installed as original equipment by the manufacturer: thermostatic air cleaner, exhaust gas recirculation system, positive crankcase ventilation system, air injection system, evaporative emissions system, and/or catalytic converter.

If installed as original equipment by the manufacturer, the catalytic converter will be considered a part of the exhaust emission system on all 1984 and later model vehicles. It will be inspected as a part of the exhaust system on prior to 1984 model vehicles. Some diesel engines re equipped from the manufacturer with catalytic converters. The catalytic converters on diesel-powered motor vehicles will be inspected for presence and leaks only.

The inspection of the exhaust emission system shall not apply to motor vehicles altered and modified to use only a fuel other than gasoline (e.g. compressed natural gas – CNG, liquefied petroleum gas – LPG). This exemption does not include diesel-powered motor vehicles. A diesel engine is neither altered not modified to use a fuel other than gasoline. A diesel powered motor vehicle with a diesel exhaust fluid system, exhaust gas recirculation system, catalytic converter, etc… shall have those items inspected for presence and leaks only.

Vehicles that are originally manufactured with a Thermostatic Air Cleaner (TAC) System are required to have a closed-type design air filter system. Vehicles that are not originally equipped with a Thermostatic Air Cleaner (TAC) System may have an aftermarket open- type air filter intake system installed. This type of system is not an item of inspection.

1. Inspection Procedure:

Examine visually.

2. Inspect for and reject if:

a. The exhaust emission system has been removed.
b. The exhaust emissions system has been disconnected.
c. The plumbing or hoses are loose, broken, leaking or improperly routed.
d. Air pump (air injection-type) belt is loose, removed, excessively cracked, frayed or has pieces missing.
e. The exhaust emission system has been altered in any manner to make it ineffective.
f. The catalytic converter has been removed, leaking, or disconnected on a 1984 or later model vehicle.

3. Gas Cap Testing.

Every gasoline-powered vehicle from 2-24 model years old will be checked for presence of and by a Department approve "Gas Cap Testing Device" to determine if the gas cap is missing or defective. The following vehicles are exempt:

a. Slow-moving vehicles.
b. Motorcycles.
c. Vehicles operated exclusively by a fuel other than gasoline.
d. Vehicles newer than 2 years old and older than 24 years old.
e. Vehicles manufactured with a cap-less fuel system.

4. Inspector Procedure.

a. Conduct daily calibration check of gas cap testing device.
b. Check for presence (all gas caps must be checked).
c. Check for correct type of gas cap(s).
d. Remove gas cap(s) and test using an approved testing device. (Gas cap present but not testable will not be cause for rejection).
e. Any gas cap(s) failing the initial test will be tested a second time to verify failure.

5. Inspect for and reject if:

a. Vehicle not equipped with required gas cap(s).

b. Vehicle not equipped with proper type of gas cap(s).
c. Gas cap(s) fails both tests.

4.20.18 Exhaust System.

Every motor vehicle shall at all time be equipped with a muffler in good working order and in constant operation. The exhaust system included the exhaust manifolds, gaskets, exhaust pipes, catalytic converters, mufflers, resonators, tailpipes, hanger, and supporting hardware.

Muffler defined: Muffler is a device consisting of a series of chamber or baffle plates or other mechanical design for the purpose of receiving exhaust gas from an internal combustion engine. On vehicles manufactured or equipped with a muffler and a turbo, the muffler must be present and in good working order.

Motor vehicle cannot be equipped with a muffler which is perforated or which was perforated and has been repaired, wither by a muffler repair jacket or by patching or in any other way. In those cases where a muffler is perforated at the time of an inspection or has been perforated and has been repaired previous to the inspection, the muffler must be replaced or the vehicle rejected.

Some pickups are equipped with a camper or hard shell cover and are sometimes used for the transportation of passengers. The tailpipe should discharge the exhaust at the rear or sides. This truck modification will be considered as a passenger compartment.

The entire structure of a passenger vehicle or a motor home-type vehicle is considered a passenger compartment. The cab only of other truck-type vehicle is considered passenger or luggage compartment.

If the vehicle is equipped with lake pipes or similar device, such pipes or devices must be securely plated and bolted or capped.

Dual exhaust systems may be modified to single exhaust systems and single exhaust systems to dual exhaust systems provided the modification does not violate requirements concerning exhaust emission systems.

The catalytic converter will be considered as a part of the exhaust system on all vehicles prior to 1984 year model and will be inspected only visually (if present) for leakage. On 1984 and later model light truck and passenger vehicle, the catalytic converter will be checked for presence and leakage. Flexible tubing which meets the requirements listed below may be used anywhere in the exhaust system.

Inspection of exhaust systems covers the discharge of exhaust fumes and is not concerned with the noise level.

1. Inspection Procedure:

The exhaust system shall be examined visually while the engine is running to determine efficiency of the system.

2. Inspect for and reject if:

a. Vehicle is not equipped with a muffler.
b. Any joint is loose or leaking, including manifolds. Does not include minor leakage at exhaust control valve (manifold damper or hear riser valve).
c. Manifold is cracked or broken causing leakage.
d. Holes, leaking seams, or patches on the muffler, resonators, exhaust pipe, tailpipe, or catalytic converter.
e. Exhaust system is not secured to the vehicle by mounting bracket designed for exhaust systems (wire, bailing wire, wire clothes hangers, wire rope, or similar material is not acceptable.
f. Any brackets are loose, broken, or missing.

g. There is excessive vibration of exhaust line.
h. Any part of the exhaust system passes through the passenger compartment.
i. The tailpipe is broken, pinched, or eroded off to the extent to allow exhaust fumes to penetrate into the interior of the passenger compartment.
j. The tailpipe fails to discharge exhaust from the rear of side or top of the passenger compartment of the vehicle.
k. Holes in the exhaust system made by the manufacturer for drainage are not cause for rejection. The tailpipe must direct the exhaust fumes out from under the passenger compartment.
l. On pickups not equipped with a camper or hard shell cover, holes or leaks in the tailpipe extending beyond the passenger compartment will not be cause for rejection.

4.20.19 Head Lamps

1. Motor Vehicles. Every motor vehicle shall be equipped with at least two head lamps, at least one on each side of the front of the motor vehicle, which head lamps shall comply with the requirements and limitation, set forth in these regulations.

a. Every head lamp upon every motor vehicle shall be located at a height of nor more than 54 inches nor less than 24 inches to be measured from the center of such lamp to the level ground upon which the vehicle stands when such vehicle is without a load.

2. Autocycles, Motorcycles, Motor-Driven Cycles Mopeds.

Every autocycle, motorcycle, motor-driven cycle, and moped shall be equipped with at least one and not more than two head lamps which shall comply with the requirements and limitation of these regulation.

a. Every head lamp upon every autocycle, motorcycle, motor-driven cycle, and moped shall be located at a height of not more than 54 inched not less than 24 inches to be measured from the center of such lamp the level ground upon which the vehicle stands when such vehicle is without a load. The head lamp on a motor-driven cycle or moped may be a single beam lamp.

3. General Provisions.

All motor vehicles including autocycles and motorcycles sold new after January 1, 1948, other than motor-driven cycles (motor scooters and motorbikes), must be equipped with multiple beam head lamps. Single beam head lamps will be permitted on those vehicles sold new prior to January 2, 1948, and on all motor- driven cycles (motor scooters, motorbikes, and mopeds).

There shall be an uppermost distribution of light, or composite beam, so aimed and of such intensity as to reveal persons and vehicles at a distance of a least 450 feet ahead for all conditions of loading (motorcycles, motor- driven cycles, and mopeds at a distance of at least 300 feet).

There shall be a lowermost distribution of light, or composite beam, so aimed and of sufficient intensity to reveal persons and vehicles at a distance of at least 150 feet ahead.

a. Single beam head lamp:

A head lamp which provides only one fixed beam, which is not adjustable from the driver's seat (usually on motor-driven cycles and mopeds only).

b. Multiple beam head lamp:

A head lamp which provides more than one beam, which may be selected as required from the driver's seat.

c. Dual head lamp system:

Those vehicles using the dual for four head lamps system must be equipped with a combination of a #1 and a #2 type head lamp on each side of the vehicle. The use of any other type of lamp in those sockets is illegal and does not meet the inspection requirements for head lamps.

d. Other **lamps:**

Fog lamps, auxiliary passing lamps, auxiliary driving lamps, backup lamps, and parking lamps are not required to be inspected.

4. Headlight Identification:

a. **Sealed Beam Lamps:** Glass headlamps whether round or rectangular identified by the #1 or #2 indicating the number of filaments in the head lamp. A one piece unit with a non-replaceable inner bulb.

b. **Composite Head Lamps:** Consisting of a lens (usually contoured to the grill and fenders of the vehicle), a reflector, and one or two halogen replaceable bulbs marked DOT or SAE on the lamp housing.

c. **Projection Head Lamps:** Consist of a lens (usually contoured to the grill and fenders of the vehicle), a reflector, and on bulb with a projection lens.

d. **High Intensity Discharge Head Lamps (HID):** Produce light with an electric arc rather than a glowing filament. Aftermarket HID bulbs installed in halogen composite head lamps are illegal.

e. Head lamps approved for use on motorcycles and motor-driven cycles cannot be used on an automobile or truck and vice versa.

f. On motorcycles, motor-driven cycles, and mopeds without batteries, the engine should be run at high idle speed to observe operation of the head lamp.

5. Preparation for Head Lamp Inspection:

Clean head lamp lenses, if necessary.

6. Sealed Beam Inspection Procedure:

Check operation and condition visually.

7. Sealed Beam head lamps will be inspected for and reject if:

a. Lamp or lamp assembly is not securely fastened to the vehicle. Lamp can be easily moved by hand.
b. Lamp is improperly connected and does not light the proper filament for different switch positions.
c. Lamp lens is cracked, broken, discolored, or missing.
d. Lamp is not of a type meeting Department or DOT or SAE standards.
e. Wiring insulation is worn, rubbed bare, or shows any evidence of burning, short circuiting, or poor electrical connections. Wiring is dangling or connections are loose
f. Lamp lens is rotated, upside down, canted, or is marked “Right,” “Left,” #1 or #2 and not appropriately installed.
g. Lamp fails to function properly in any manner, such as any filament in a head lamp fails to burn.
h. Lamp has dirt, any contamination, discoloration, or moisture on the inside.
i. Lamp switch or dimmer switch does not operate properly and is not convenient for the driver.

j. Foreign material placed on head lamp lens, such as shields, half of lens, paint, tape, tinting (other than clear), that interferes with the light beam of the lamp.
k. Headlamp is covered by any lens or cover located in front of the headlamp which is any shade or color other than headlamp which is any shade of color other than clear.
l. Vehicle is not equipped with head lamps as required or lamp is missing.
m. Lens is other than clear.
n. Lamp is mounted on vehicle more than or less than prescribed mounting heights.
o. Headlamps are not of equal intensity.
p. There is physical damage that would obviously cause a headlight beam to fail to illuminate the roadway ahead of the vehicle sufficiently.
q. Retractable lamps: Must fully open and lock in a rigid position.

10. Projection Head Lamp Inspection Procedure:

Check operation and condition visually.

11. Projection Head Lamps will be inspected for and rejected if:

a. Lamp or lamp assembly is not securely fastened to the vehicle. Lamp can be easily moved by hand.
b. Lamp is improperly connected and does not light the proper filament for different switch positions.
c. Lamp lens is broken, discolored, or missing (Exception: Composite headlamps will not be rejected for being cracked unless the reflective material inside the lamp assembly is discolored or deteriorated).
d. Lamp is not of a type meeting Department or DOT or SAE standards.
e. Wiring insulation is worn, rubbed bare, or shows any evidence of burning, short circuiting, or poor electrical connections. Wiring is dangling or connections are loose.
f. Lamp lens is rotated, upside down, canted.
g. Lamp fails to function properly in any manner, such as any filament in a head lamp fails to burn.
h. Lamp has dirt, standing water, or discoloration inside.
i. Lamp switch or dimmer switch does not operate properly and is not convenient for the driver.
j. Foreign material placed on head lamp lens, such as shields, half of lens, paint, tape, tinting (other than clear, that interferes with the light beam of the lamp.
k. Head lamp is covered by any lens or cover located in front of the head lamp which is any shade or color other than clear.
l. Vehicle is not equipped with head lamps as required or lamp is missing.
m. Lens is other than clear.
n. Headlamps are not of equal intensity.
o. Lamp is mounted on vehicle more than or less than prescribed mounting heights.
p. There is physical damage that would obviously cause a headlight beam to fail to illuminate the roadway ahead of the vehicle sufficiently.
q. Retractable lamps: Must fully open and lock in a rigid position.

12. High Intensity Discharge Head Lamp Inspection Procedure.

Check operation and condition visually.

13. High Intensity discharge Head Lamps will be inspected for and rejected if:

a. Lamp or lamp assembly is not securely fastened to the vehicle. Lamp can be easily moved by hand.
b. Lamp is improperly connected and does not light the proper filament for different switch positions.
c. Lamp lens is broken, discolored, or missing (Exception: Projection headlamps will not be rejected for being cracked unless the reflective material inside the lamp assembly is discolored or deteriorated).

d. Lamp is not of a type meeting Department or DOT or SAE standards.
e. Wiring insulation is worn, rubbed bare, or shows any evidence of burning, short circuiting, or poor electrical connections. Wiring is dangling or connections are loose.
f. Lamp lens is rotated, upside down, canted
g. Lamp fails to function properly in any manner.
h. Lamp has dirt, standing water, or discoloration inside
i. Lamp switch or dimmer switch does not operate properly and is not convenient for the driver.
j. Foreign material placed on head lamp lens, such as shields, half of lens, paint, tape, tinting (other than clear), that interferes with the light beam of the lamp.
k. Head lamp is covered by any lens or cover located in front of the head lamp which is any shade or color other than clear.
l. Vehicle is not equipped with head lamps as required or lamp is missing.
m. Lens is other than clear.
n. Headlamps are not of equal intensity.
o. Lamp is mounted on vehicle more than or less than prescribed mounting heights.
p. There is physical damage that would obviously cause a headlight beam to fail to illuminate the roadway ahead of the vehicle sufficiently.
q. Retractable lamps: Must fully open and lock in a rigid position.

4.20.20 Horn.

Every motor vehicle shall be equipped with a horn (electric or air) in good working order and capable of emitting a sound audible for a distance of 200 feet or more, but no horn shall emit an unreasonably loud or harsh sound or a whistle.

Bulb or hand-operated horn is acceptable if original vehicle equipment.

1. Inspection Procedure

a. Sound the horn.
b. Check actuating device.
c. Examine wiring – mounting.

2. Inspect for and reject if:

a. Vehicle is not equipped with a horn.
b. Horn or horn switch is not securely fastened.
c. Wiring insulation is worn, rubbed bare, or shows any evidence of burning, short circuiting, or poor connections.
d. Horn switch not readily accessible to vehicle operator.
e. Horn is actuated by grounding two bare wires or similar method.
f. Sound is not audible under normal conditions for 200 feet.
g. Horn emits an unusually loud or harsh sound or whistle.
h. Operation of the horn interferes with the operation of any other circuit.
i. Horn switch missing or inoperative

4.20.21 License Plate Lamp.

Either a tail lamp or a separate lamp shall be so constructed and placed as to illuminate with a white light the rear registration plate and render it clearly legible for a distance of 50 feet to the rear. Any such lamp shall be so wired as to be lighted when the head lamps or auxiliary driving lamps are lighted.

On vehicles such as truck-tractors which require no rear registration plate, a license plate lamp would not be required. If two license plates are issued, a license plate lamp is required.

Do not reject a vehicle because the rear registration plate is obstructed.

1. Inspection Procedure.

Check operation and condition visually.

2. Inspect for and reject if:

a. Lamp is not present, steady burning, or operational. LED lights have less than 50% of diodes illuminated.
b. Lamp is not securely mounted to the vehicle.
c. Lamp is not placed to illuminate with a white light the rear registration plate. (Only one lamp is required.)
d. Wiring insulation is worn, rubbed bare, or shows any evidence of burning, short circuiting, or poor electrical connections.
e. Lamp is not wired so as to be lighted when head lamps or auxiliary driving lamps are lighted.
f. Lamp emits a glaring light to the rear.
g. Lens is missing, cracked, or broken to the extent that a portion of the lens is missing and/or separated, permitting light from the bulb to emit through the crack or break.
h. Lamp lens has been repaired with repair tape or repair kit.
i. Lamp assembly is cracked allowing water to enter or the lamp assembly contains standing water.
j. Lamp does not meet the visibility requirements.

4.20.22 Mirror.

Every motor vehicle shall be equipped with a mirror so located as to reflect to the driver a view of the highway for a distance of at least 200 feet to the rear of such motor vehicle.

1. Inspection Procedure

a. Inspect only one mirror.

b. If the vehicle is equipped with more than one mirror, only one, either inside or outside, needs to meet all requirements.

1. Exterior Rearview Mirror: From the driver's position, visually inspect exterior mirror for a clear and reasonably unobstructed view to the rear. Look for correct location and stable mounting.

2. Interior Rearview Mirror: From the driver's position, visually inspect interior mirror for proper mounting, location, cracks, sharp edges, and ease of adjustment.

2. Inspect for and reject if:

a. Mirror does not provide the driver with a clear view to the rear of 200 feet.
b. Vehicle is not equipped with at least one mirror.
c. Mirror creates interference with driver's forward vision.
d. Reflective surface of mirror is cracked, broken, peeled, tarnished, or has sharp edges.
e. Mirror is not mounted securely to prevent swing or excessive vibration, unless the vehicle is equipped with another mirror which meets requirements.

f. Vehicles with no visibility through the rear window will require two outside mirrors, one on each side of the vehicle.

4.20.23 Reflectors. (Rear)

Every motor vehicle, trailer, semitrailer, and pole trailer shall carry on the rear, either as a part of the tail lamps or separately, two or more red reflectors. Autocycles, motorcycles, motor- driven cycles, and mopeds shall have mounted on the rear, either as a part of the tail lamp or separately, at least one red reflector.

Every reflector upon any vehicle shall be of such size and characteristics and so mounted as to be visible at night from all distances within 600 feet to 100 feet from such vehicle when directly in front of the lawful lower beams of head lamps, except that reflectors on passenger cars, autocycles, motorcycles, and motor-driven cycles manufactured or assembled prior to January 1, 1972, shall be visible at night from all distances within 350 feet to 100 feet when directly in front of lawful upper beams of the head lamps.

Reflectors on all vehicles shall be mounted at a height of not less than 15 inches or more than 60 inches measured from the center of such reflector to the level ground upon which the vehicle stands when the vehicle is without a load. If the highest part of the permanent structure of the vehicle is less than the height required, the reflector shall be mounted as high as that part of the permanent structure will permit.

Rear reflectors on a vehicle shall reflect a red color.

Red reflectors required on the rear of a vehicle may be incorporated with the tail lamp assembly.

Required rear reflectors shall be mounted with one on each side of the center of the vehicle.

Rear reflectors on pole trailers may be mounted on each side of the bolster or load.

1. Inspection Procedure.

Check condition and mounting.

2. Inspect for and reject if:

a. Reflector is not present.
b. Reflector is not of red color.
c. Reflector is not properly and/or securely mounted to the vehicle.
d. Reflector is cracked to the extent that the reflecting ability is impaired.
e. Reflector is discolored, deteriorated, or painted.
f. Visibility distance is not as required.
g. Requirements shown on lighting diagram are not met. Reflector height requirements are not met.

4.20.24 Reflectors (Side).

Refer to Reference Section for lighting diagrams.

1. Required on all:

Buses 80 inches or more in overall width. Trucks 80 inches or more in overall width. Trailers and semitrailers 80 inches or more in overall width.

a. Every required reflector upon any of the above named commercial vehicles shall be of such size and

characteristics and so maintained as to be readily visible at nighttime from all distances within 600 feet to 100 feet from the vehicle when directly in front of the lawful lower beams of head lamps, except that the visibility for reflectors on vehicles manufactured or assembled prior to January 1, 1972, shall be measured in front of lawful upper beams of head lamps.

b. Reflectors on vehicles shall be either mounted at a height of not less than 15 inches nor higher than 60 inches above the ground on which the vehicle stands.

c. If the highest part of the permanent structure of the vehicle is less than the height required, the reflector shall be mounted as high as that part of the permanent structure will permit.

d. Reflectors mounted on the sides near the front of a vehicle shall reflect an amber color.

e. Reflectors mounted on the sides near the rear of a vehicle shall reflect a red color.

f. On buses and trucks 80 inches or more in overall width and trailers and semitrailers 80 inches or more in overall width: two reflectors on each side - one at or near the front and one at or near the rear.

g. On trailers and semitrailers 30 feet or more in overall length - one amber reflector on each side - centrally located with respect to the length of the vehicle.

h. On pole trailers - one amber reflector - at or near the front of the load (if loaded.)

2. Inspection Procedure

Check condition and mounting.

3. Inspect for and reject if:

a. Reflectors are not present.

b. Reflectors are not of the required color for the location on the vehicle.

c. Reflectors are not properly and/or securely mounted to the vehicle.

d. Reflector is cracked to the extent that the reflecting ability is impaired.

e. Reflectors are discolored, deteriorated, or painted.

f. Requirements shown on lighting diagram are not met. Reflector height requirements are not met.

g. Visibility distance is not as required.

4.20.25 Safety Guards or Flaps

Safety Guards or Flaps Requirement and Inspection.

Required on all:

Trucks, Light Trucks - Trailers and Semitrailers (In combination with a towing vehicle). If the rearmost axle of the vehicle or (combination) has at least four tires or more, or at least two super single tires. A super single tire is a wide based single tire that may be used in place of two standard tires on the same axle.

Safety Guards are Flaps are Not Required On:

1. Buses
2. Motor homes
3. Pole trailers
4. Truck-tractors

Safety guards or flaps shall be located and suspended behind the rearmost wheels of such vehicle or if in combination behind the rearmost wheels of such combination to within twelve (12) inches of the surface of the roadway. Safety guards or flaps shall be at least as wide as the tires they are protecting.

Safety guards or flaps shall be of metal, rubber, rubberized material, or other substantial material, capable of

remaining in place back of rear wheels by their own weight while the said vehicle is being operated. The construction of safety guards or flaps will be such that they will remain in proper place back of rear wheels and will be rigid enough to prevent slush, mud, or gravel being transmitted from the vehicle's rear wheels to the windshield of the following vehicle.

When trailers and semitrailers are presented for inspection in combination, each trailer or semitrailer will be considered a separate vehicle and safety guards or flaps will be required on the rearmost axle of each trailer or semitrailer.

1. Inspection Procedure.

Check for presence and condition.

2. Inspect for and reject if:

a. Safety guard or flap is not present.
b. Safety guard or flap is not securely mounted.
c. Safety guard or flap is not as wide as the tires that it is protecting.
d. Safety guard or flap is split or torn to the extent that it is ineffective.
e. The bottom edge of safety guard or flap is more than twelve (12) inches from the surface of the roadway.

4.20.26 Seat Belts.

Front seat belts are required on every motor vehicle in which front seat belt anchorages were a part of the manufacturer's original equipment on the vehicle.

Anchorages defined: A seat belt anchorage consists of a threaded hole in suitable structure to receive the seat belt attachment fittings or a circular anchor which is welded to the vehicle chassis. Self-threading bolts are inserted into the anchor to form the complete seat belt anchorage assembly.

1. Inspection Procedure.

Inspect front lap seat belts for frayed, split, or torn webbing; malfunctioning buckles; and loose or damaged anchorages or floor pan. Vehicles originally equipped with automatic seat belts (shoulder belts) without front lap seat belts will have the automatic belts inspected.

Front lap belts only will be inspected in all other vehicles. The ignition seat belt interlock system is not an item of inspection.

2. Inspect for and reject if:

a. Front lap seat belts are required and not present.
b. Seat belt webbing is frayed, split, or torn.
c. Belt anchorages or attachment fittings are loose, badly corroded, missing, or not fastened to belt.
d. Belt buckles loose or inoperative.
e. All seat belt anchor bolts are not securely fastened to floor or are missing.
f. Pelvic restraint is not present.
g. Seat belt will not adjust to allow proper fit.

4.20.27 Side Marker Lamps

Refer to Reference Section for lighting diagrams.

1. Required on all:

Buses 80 inches or more in overall width. Trucks 80 inches or more in overall width. Trailers and semitrailers 80

inches or more in overall width. Trailers and semitrailers 30 feet or more in overall length. Pole trailers.

a. Side marker lamps shall, so far as is practicable, be mounted on the permanent structure of the vehicle in such a manner as to indicate the length of the vehicle.
b. Side marker lamps and clearance lamps may be mounted in combination, provided illumination is given as required by law.
c. Side marker lamps mounted on the front
or on the sides near the front of a vehicle shall display an amber color.
d. Side marker lamps mounted on the rear or on the sides near the rear of a vehicle shall display a red color.
e. Side marker lamps shall be visible under normal atmospheric conditions at a distance between 500 feet and 50 feet from the vehicle on which mounted.
f. On buses and trucks 80 inches or more in overall width and trailers and semitrailers 80 inches or more in overall width:

    1. Two side marker lamps, one on each side, one at or near the front and one at or near the rear.

g. All trailers and semitrailers 30 feet or more in overall length are required to have mounted centrally located with respect to the length of the vehicle:

1. On each side, one amber side marker.

h. On pole trailers:

    1. On each side, one amber side marker lamp at or near the front of the load (if loaded).
    On the rearmost support for the load, one combination marker lamp showing amber to the front and red to the rear and side, or cluster of required color lamps.

2. Inspection Procedure.

Check operation and condition visually.

3. Inspect for and reject if:

a. Lamps are not present.
b. Lamps are not securely mounted and properly located.
c. Lamps do not emit required color; lens or bulb painted; or not steady burning.
Visibility requirements are not met. LED lights have less than 50% of diodes illuminated.

d. Lenses are discolored or missing.
e. Wiring insulation is worn, rubbed bare, or shows any evidence of burning, short circuiting, or poor electrical connections.
f. Lens is cracked or broken to the extent that a portion of the lens is missing and/or separated, permitting light from the bulb to emit through the crack or break.
g. Lights are not of equal intensity.
h. Lamp lenses repaired with repair tape or repair kit.
i. Requirements shown on lighting diagram are not met. Side marker lamp height requirements are not met.

Vehicles that are equipped and lighted by a red bulb will be rejected. (There are no red bulbs currently approved for use on vehicles.)

4.20.28 Steering

The steering system of the vehicle must be inspected to determine if excessive wear and/or maladjustment of the steering linkage and/or steering gear exists. Wear and adjustment of the steering system will be checked by measuring lash. Vehicle must be on a dry surface.

Lash defined: Lash is the condition in which the steering control can be turned through some part of a revolution without front wheel motion. The wheels should be loaded and positioned straight ahead.

Jamming defined: Jamming is any obstruction to the turning of the steering control caused by interference between some components of the steering system.

The obstruction would include tires too large or damaged fenders that would interfere with a full right or left turn.

1. Inspection Procedure.

Lash or Free Play: With steering axle tires in straight ahead position, turn steering wheel until the turning motion can be observed at the steering axle tires. Measure lash (See Chart Below). On vehicles equipped with power steering, the fluid level, belt tension and belt condition must be checked for compliance before starting the engine to check for proper operation of the steering. On vehicles equipped with power steering, the engine must be running when measuring steering lash.

2. Inspect for and reject if:

a. Steering Lash.

Steering Wheel Diameter	Manual Steering System	Power Steering System
14" or less	2"	3"
16"	2"	4"
18"	2"	4-3/4"
20"	2"	5"
22"	2-3/4"	5-3/4"

b. It is impossible to turn the steering wheel from full right to full left without binding or jamming other than at wheel stops.
c. Steering mechanism is not firmly attached and free of frame cracks or missing bolts.
d. Modification of the steering system so as to affect the proper steering of the vehicle or steering wheel has been modified or replaced with one that is noticeably smaller than original factory equipment.
e. Any excessively worn or broken parts in the steering system.
f. Visible leaks in power steering unit or hoses.
g. Power steering belt is excessively cracked, frayed, or has pieces missing or tension is not adequate. Serpentine belts are not to be rejected merely for cracks in the ribs.

Fluid in power steering unit is below manufacturer's recommended level. Do not overfill.

On motorcycles and motor-driven cycles, handlebars or steering head is bent, loose, broken or damaged so as to cause unsafe condition in steering.

h. On vehicles equipped with flexible couplings, or energy-absorbing steering columns, when it is obvious through a visual inspection of the vehicle that the column has been damaged and is in an unsafe condition, it should be rejected.

Tilt steering wheels must lock into position. Steering wheel must be securely mounted to the steering shaft.

4.20.29 Stop Lamps.

Every motor vehicle, trailer, semitrailer, and pole trailer shall be equipped with two or more stop lamps. Passenger cars and trucks manufactured or assembled prior to the model year 1960 shall be equipped with at least one stop lamp. At least one stop lamp is required on all autocycles, motorcycles, and motor-driven cycles.

A stop lamp must emit a steady burning red or amber light, or any shade of color between red and amber, be spaced as far apart as practicable and be visible from a distance of not less than 300 feet to the rear in normal sunlight. The stop lamp shall be actuated upon application of the service brake and which may, but need not, be incorporated with one or more other rear lamps.

Stop lamp lens must be of a type meeting Department of Public Safety standards.
On vehicles equipped with two stops lamps, the stop lamps shall be mounted on the same level and as widely spaced laterally as practicable.

1. Inspection Procedure.

Check operation and condition visually.

2. Inspect for and reject if:

a. Required lamp or lamps are not present.
b. Lamps are not properly located or securely mounted to the vehicle.
c. Lamp does not emit a steady burning red or amber light which is actuated on application of the service (foot) brake.
d. Lamp is not visible from a minimum distance of 300 feet to the rear of the vehicle to which it is attached. LED lights have less than 50% of the diodes illuminated. Lamp height requirements are not met (Refer to Lighting Diagram).
e. Lamp lens is painted, missing, discolored, or does not fit properly.
f. Wiring is shoddy or electrical connections are poor.
g. Lamp projects a glaring or a dazzling light.
h. Lamp is not mounted on rear of vehicle.
i. Lens is cracked or broken to the extent that a portion of the lens is missing and/or separated, permitting light from the bulb to emit through the crack or break.
j. Lamps which are not of equal intensity.
k. Lamp lenses repaired with repair tape or repair kit.
l. Any lamp assembly is cracked allowing water to enter or the lamp assembly contains standing water.
m. Must be steady burning.
n. Vehicles that are equipped with and lighted by a red bulb will be rejected. (There are no red bulbs currently approved for use on vehicles.)

Center High Mounted Stop Lamp.

High-mounted stop lamp means a lamp mounted high and possibly forward of the tail, stop, and rear turn signal lamps intended to give a steady stop warning.

All passenger cars manufactured on or after September 1, 1985 shall be equipped with a red center, high mounted stop lamp.

All multipurpose passenger vehicles, trucks and buses less than 80 inches wide with a GVWR of 10,000 pounds or

less, manufactured on or after September 1, 1993, shall be equipped with a red center, high mounted stop lamp. Any truck that has a camper shell that covers the red center high mounted stop lamp shall not be rejected. However, if the camper shell was manufactured with a red center, high mounted stop lamp it must be operable at the time of inspection. The red center, high mounted stop lamp, if required, will not be a substitute for any other required stop lamp.

Vehicles that are equipped from the manufacturer with approved lenses which are clear and lighted by L.E.D. lights will pass state inspection.

1. Inspection Procedure.

Check operation and condition visually.

2. Inspect for and reject if:

a. Required lamp is not present.
b. Lamp is not properly located or securely mounted to the vehicle.
Lamp does not emit a steady burning red light which is actuated on application of the service (foot) brake.

c. Lamp is not visible from a minimum distance of 300 feet to the rear of the vehicle to which it is attached. LED lights have less than 50% of the diodes illuminated. Lamp height requirements are not met (Refer to Lighting Diagram).
d. Lamp lens is painted, missing, discolored, does not fit properly or has any aftermarket tint applied over the center high mount stop lamp.
e. Wiring is shoddy or electrical connections are poor.
f. Lamp projects a glaring or a dazzling light.
g. Lamp is not mounted on rear of vehicle.
i. Lens is cracked or broken to the extent that a portion of the lens is missing and/or separated, permitting light from the bulb to emit through the crack or break.
j. Lamp which is not of equal intensity.
k. Lamp lens repaired with repair tape or repair kit.
l. Any lamp assembly is cracked allowing water to enter or the lamp assembly contains standing water.
m. Must be steadily burning.
n. Vehicles that are equipped with and lighted by a red bulb will be rejected. (There are no red bulbs currently approved for use on vehicles.)

4.20.30 Tail Lamps.

Every motor vehicle, trailer, semitrailer, pole trailer, and any other vehicle which is being drawn at the end of a combination of vehicles shall be equipped with at least two tail lamps mounted on the rear which, when lighted, shall emit a steadily burning red light plainly visible from a distance of 1,000 feet to the rear, except that passenger cars and trucks manufactured or assembled prior to the model year 1960 shall have at least one tail lamp. On vehicles equipped with more than one tail lamp, the tail lamps shall be mounted on the same level and as widely spaced laterally as practicable.

Every tail lamp upon every vehicle shall be located at a height of not more than 72 inches nor less than 15 inches. Tail lamps are used only to designate the rear of a vehicle.

Every tail lamp upon autocycles, motorcycles, motor-driven cycles, or mopeds shall be located at a height of not more than 72 inches nor less than 20 inches. Tail lamp lens must be of a type meeting Department of Public Safety standards.

At least two tail lamps are required on all motor vehicles, trailers, semitrailers, and pole trailers, except that at least one tail lamp is required on autocycles, motorcycles, motor-driven cycles, and mopeds and all 1959 model year and earlier passenger cars and trucks.

Vehicles that are equipped from the manufacturer with approved lenses which are clear and lighted by L.E.D. lights will pass state inspection.

Vehicles that are equipped with aftermarket lenses which are clear and lighted by a red bulb will be rejected. (There are no red bulbs currently approved for use on vehicles.)

1. Inspection Procedure.

Check operation and condition visually.

2. Inspect for and reject if:

a. Required lamp or lamps are not present.
b. Lamp is not securely mounted to vehicle.
c. Lamp does not emit a steady burning red light plainly visible 1,000 feet to the rear. LED lights have less than 50% of the diodes illuminated.
d. Lamp lens is painted, missing, discolored, does not fit properly, or is any color other than red or clear.
e. Wiring is shoddy or electrical connections are poor.
f. Lamp is not wired so as to be lighted when head lamps or auxiliary driving lamps are lighted
g. Lamp is obstructed by any part of the body.
h. Lamp does not emit a red color.
i. Lamps are not mounted on the same level and as widely spaced laterally as practicable. Lamp height requirements are not met.
j. Lamps are not mounted on rear of vehicle.
k. Lens is cracked or broken to the extent that a portion of the lens is missing and/or separated, permitting light from the bulb to emit through the crack or break.
l. Lamp lenses repaired with repair tape or repair kit.
m. Lamps are not of equal intensity.
n. Is not steady burning.
o. Any lamp assembly is cracked allowing water to enter or the lamp assembly contains standing water.
p. Vehicles that are equipped with a red bulb will be rejected. (There are no red bulbs currently approved for use on vehicles.)

4.20.31 Tires.

Every motor vehicle (including autocycles, motorcycles and motor-driven cycles, trailer, semitrailer, pole trailer, and mobile home) registered in this state and operated on the streets and highways of this state and required to be inspected shall be equipped with tires in proper and safe condition.

Definition of terms:

Rim: A metal support for a tire or a tire and tube assembly upon which the tire beads are seated.

Bead: The part of the tire made of high tensile steel wires, wrapped and reinforced by the ply cords, which is shaped to fit the rim.

Bead Separation: A breakdown of bond between components in the bead area.

Sidewall: The portion of the tire between the tread and the bead.

Cord: Textile, steel wire strands forming the plies or other structure of the tire.

Cord Separation: Cord parting away from adjacent rubber compounds.

Ply: Layer of rubber coated parallel cords forming the tire body.

Ply Separation: A parting of rubber compound between adjacent plies.

Tread: The portion of the tire that comes in contact with the road.

Tread Separation: The pulling away of the tread from the tire carcass.

Tread Rib: A tread section running circumferentially around a tire.

Groove: The space between two adjacent tread ribs.

Tread Depth: The amount of tread design on the tire. Tread depth includes both original, retread, and recapped tread design; and in respect to special mileage commercial tire design.

Regroovable Commercial Tire: A tire manufactured with an extra layer of rubber between the cord body and the original tread design which extra layer is designed for the purpose of recutting or regrooving, and which tire is specifically labeled as a regroovable tire.

Belt: A layer or layers made of fabric or other material, located under the tread area.

1. Inspection Procedure.

Tires should be inspected visually and the tread should be measured with a tread depth gauge calibrated in 32nds of an inch if it does not have tread wear indicators. Some tire manufacturers have placed tread wear indicators at 5/32nds of an inch, do not reject tires so equipped unless the tread depth is less than 2/32nds of an inch when measured with an approved tire gauge. No tire shall be passed to be in safe operating condition unless it meets the visual and tread depth requirements set forth in these regulations.

Inspection of the spare tire is not required. All tires must appear to be properly inflated - even though a gauge check is not required.

The tread depth requirement of these regulations shall apply to both tires of each set of dual wheels. The other requirements will also apply to both tires in each set of dual wheels.

Dragster tires or racing slicks without sufficient tread or which have had all tread removed are not acceptable.

2. Inspect for and reject if:

a. Any tire with a localized worn spot that exposes the ply or cord through the tread.
b. Any tire with tread or sidewall cracks, cuts, or snags (as measured on the outside of the tire) in excess of one inch in any direction and deep enough to expose the body cords.
c. Any tire which has any visible bumps, bulges, or knots apparently related to tread or sidewall separation or partial failure of the tire structure, including bead area.
d. Any tire which has been regrooved or recut below the original groove depth, except special (regroovable) tires which have extra undertread rubber for this purpose (commercial vehicles only) and are identified as such.

e. Any dual wheel assembly where the side of one tire is in contact with the other. (Any dual tires that contact each other.)
f. Any tire that is marked “Not for Highway Use,” “Farm Use Only,” “For Racing Purposes Only,” or with other use restrictions that would indicate the tire is not meant for highway use. This would include vehicles using temporary spares, inflatables, or small high pressure spares.
g. Any tire which has been repaired temporarily by the use of blowout patches and boots. Nail hole plugs or patches are not cause for rejection.
h. Any tire without tread wear indicators worn so that less than 2/32 of an inch of tread design depth remains when measured with a tread depth gauge at the lowest points in any two adjacent major grooves in the center or middle of the tire.
i. Any tire with tread wear indicators worn so that the tread wear indicators contact the road in any two adjacent major grooves in the center or middle of the tire.

Refer to Reference Section for further tire inspection procedures.

4.20.32 Turn Signal Lamps.

Every motor vehicle, trailer, semitrailer, and pole trailer shall be equipped with electrical turn signal lamps, except that passenger cars and trucks less than 80 inches in width and manufactured or assembled prior to the model year 1960 need not be equipped with electrical turn signal lamps.

If the bed, body, cab, load, and any other equipment on a vehicle or combination of vehicles exceeds 24 inches or more to the left of the center of the top of the steering post in the same horizontal plane (that is, as high as the center of the top of the steering post) or when the distance from the center of the top of the steering post to the rear limit of the body or load exceeds 14 feet, then turn signal lamps are required, even though a hand and arm signal can be seen and the vehicle was manufactured or assembled prior to model year 1960.

Vehicles equipped from the manufacturer with lenses are clear and lighted by L.E.D. bulbs will pass state inspection.

Required turn signal lamps must be visible to the front and to the rear of the vehicle.

1. Electric turn signal lamp types:

a. Single-faced units.
b. Double-faced units.
c. Arrow-faced units.
d. Kits designed to be used in conjunction with the parking light assembly.

2. Electric turn signal lamp flashers. All open- faced and arrow-type turn signal lamps must flash on and off in order to clearly indicate an intention to turn.

a. Turn signal lamps are required on those vehicles manufactured with a right-hand (steering wheel) drive, regardless of model year.
b. A single lamp (large double-faced unit) on each side of a truck-tractor, which is visible to the front and rear, will suffice for turn signal lamps.

3. Turn signal lamp mounting. The lamps showing to the front shall be mounted on the same level and as widely spaced laterally as practicable and, when signaling, shall emit a white or amber light or any shade of light between white and amber.

a. The lamps showing to the rear shall be mounted on the same level and as widely spaced laterally as practicable and, when signaling, shall emit a red or amber light or any shade of color between red and

amber.

b. Turn signal lamps on vehicles 80 inches or more in overall width shall be visible from a distance of not less than 500 feet to the front and rear in normal sunlight. Turn signal lamps on vehicles less than 80 inches in overall width shall be visible from a distance of not less than 300 feet to the front and rear in normal sunlight.
c. Turn signal lamps may, but need not, be incorporated in other lamps on the vehicle.
d. Turn signal lamps shall indicate an intention to turn by flashing lamps showing to the front and rear of a vehicle. On a combination of vehicles, turn signal lamps shall indicate an intention to turn by flashing lamps to that side of the vehicle or combination toward which the turn is to be made.
e. Motorcycles, motor-driven cycles, and mopeds are not required to be equipped with turn signal lamps.
f. Semaphore or mechanical arm devices are not acceptable as turn signal lamps.

4. Inspection Procedure.

Check operation and condition visually.

5. Inspect for and reject if:

a. Lamps are required and not present.
b. Lamp is not securely mounted or properly located on the vehicle. Lamp height requirements are not being met (Check Lighting Diagram).
c. Lamp is not of a type meeting Department standards.
d. Lamp lens is discolored or missing.
e. Wiring insulation is worn, rubbed bare, or shows any evidence of burning, short circuiting, or poor electrical connections.
f. Switch is not convenient to the driver or indicator light does not operate. Selector switch must lock in proper turn position, if required for the signal to operate, when applied but need not cancel automatically.
g. Signal shows any color other than white or amber to the front, or signal shows any color other than red or amber to the rear.
h. Signal does not flash or is not operating properly.
i. Signal is not clearly visible to the front and to the rear of the vehicle for the required distances. LED lights have less than 50% of the diodes illuminated.
j. Lens is cracked or broken to the extent that a portion of the lens is missing and/or separated, permitting light from the bulb to emit through the crack or break.
k. Lamps are not of equal intensity.
l. Lamp lenses cannot be repaired with repair tape or repair kit.
m. Any lamp assembly is cracked allowing water to enter or lamp assembly contains standing water.
n. Vehicles that are equipped with clear aftermarket lenses lighted by a red bulb will be rejected (There are no red bulbs currently approved for use on vehicles).

4.20.33 Vehicle Identification Number, Motor, or Serial Number.

Make an actual physical check of the motor block, frame, or body part where such number is located and record through the electronic interface device. Station or certified inspector suspension can result from taking this number from the old Vehicle Inspection Report, title, or registration receipt. The entire vehicle identification number must be used. Do not reject a vehicle because it has no vehicle identification number or motor or serial number. Vehicles with altered or removed vehicle identification

numbers or motor or serial numbers should be reported to your Department representative.

4.20.34 Wheel Assembly.

The inspection of all wheels and rims will be visual. Spare wheels and rims will not be inspected.

Wheel covers or hubcaps may be removed from the vehicle if the certified inspector has probable cause or reason to believe that wheel or rim defects exist.

1. Inspection Procedure.

Examine visually.

2. Inspect for and reject if:

a. Loose, missing, or damaged wheel studs, bolts, nuts, or lugs.
b. Any part of the wheel is bent, cracked, rewelded, or damaged so as to affect safe operation of the vehicle.
c. Wheel nuts, studs, and clamps which are loose, broken, missing, or mismatched. Adequate thread engagement is imperative. Stud and nut threads on wheel lugs must engage completely through the entire threaded portion of the nut.
d. Rims and rings which are mismatched, bent, sprung, or otherwise damaged. Check for evidence of rim slippage - this is an indication of wear of loose nuts.
e. Disc wheels with elongated bolts, holes, or cracks between hand holes or stud holes, or both.
f. Cast wheels with cracks, evidence of wear in the clamp area, or both.
g. Rims have defects or cracks to the extent that they impair the safe mounting and proper retention of tires.
h. Any wheel cannot be securely fastened to the hub of the vehicle.
i. On motorcycles and motor-driven cycles, any spokes are bent, loose, broken, or missing.

4.20.35 Window Tinting.

All vehicles that have applied window coating, tinting, or sun screening on the windows must be inspected. Vehicles with windows which cannot be raised or lowered for the inspection of window tint will require that the inspection be terminated.

1. Inspect for and reject if:

a. Glass coating or sun screening devices on windshields:
    1. Extends downward beyond the AS-1 line or more than five (5) inches from the top of windshield on vehicles without an AS-1 line. Measurements shall be taken from inside the windshield; or
    2. Is red, blue, amber in color or is a reflective type.

b. Glass coating or sun screening devices on windows:
    1. Windows immediately to the right and left of the driver, which open, have less than 25% light transmittance.
    2. If one window is inspected and has more than 25% light transmittance and the other window has window tinting which is obviously the same degree of sun screening, only the one window needs to be inspected

c. Check tint meter calibration before rejecting vehicle.

2. Exemptions:

a. The following will not be considered as sun screening or glass coating devices:

1. Rearview mirror.
2. Sun visors.
3. Motor carrier destination signs.
4. Rear window wipers and motors.
5. Trunk lid handle or hinge.
6. Luggage racks
7. A clear (un-tinted) UV film is allowed anywhere on the front windshield without a medical exemption.

b. Do not inspect glass coating on vehicles used to transport passengers on a regular basis for a fee, (i.e., taxi, limousine, and buses).

c. Do not inspect glass coating on a vehicle that is maintained by a law enforcement agency and used for law enforcement purposes.

d. Vehicles used by persons with medical permits. Drivers of these vehicles must present a letter of authorization from the Texas Department of Public Safety to gain this exemption.

e. Multipurpose vehicles may be equipped with any non-reflective film on the side windows that is to the rear of the driver. No label required. (Those motor vehicles designed to carry 10 or fewer persons constructed either on a truck chassis or with special features for occasional off-road use.)

1. Medical Exemption Application.

a. The medical exemption allows motorists to place a darker tint on the front side windows and the upper portion of the front windshield (top 5 inches or above the AS-1 line, whichever is less). The exemption does not, however, allow a motorist to place a sun screening device on any portion of the front windshield.

4.20.36 Windshield Wipers.

Every motor vehicle with a windshield must be equipped with a windshield wiper or wipers adequate for cleaning rain, snow, or other moisture from the windshield; in good working order; and constructed so as to permit operation and control by the driver of the vehicle.

All motor vehicles which were originally equipped (manufactured) with one wiper, only one wiper is required; if originally equipped (manufactured) with two or more wipers, all wipers will be required. Replacement of vacuum with electric or electric with vacuum wipers is permissible. Vehicles presented for inspection without windshields will not be required to have wipers. The windshield is not an item of inspection. Manually operated wipers are permissible if original vehicle equipment.

1. Inspection Procedure.

Inspect for satisfactory operation. If vacuum operated, engine must be idling and control full on. Inspect for proper contact of blades with windshield. Raise arm away from windshield and release. Arm should return to original position and wiper blade should contact the windshield firmly. The rear window is not considered a windshield and any wiper present on the rear window is not an item of inspection.

2. Inspect for and reject if:

a. Vehicle is not equipped with the number of wipers with which it was originally equipped.

b. Wiper is inoperative, does not operate freely, or is improperly adjusted.
c. Wiper blades have damaged, hardened, or badly worn rubber elements.
d. The portion of the rubber element that contacts the windshield is torn more than one inch on one end or is torn a total of one inch on both ends.
e. Any part of the rubber element is torn loose from the metal backing or blade base.
f. Metal parts of wiper blades or arms are damaged or come in contact with the windshield.
g. Wiper is incapable of adequately cleaning the windshield.
h. Wiper blades are not making proper contact with windshield
i. Wiper controls are not operating properly or are located beyond the driver's reach.
j. The rear window is not considered a windshield and any wiper present on the rear window is not an item of inspection.

4.20.37 Rejected Vehicles.

Every inspection must be a complete inspection before a vehicle may be approved or rejected. In case a vehicle is rejected and the owner fails to have the necessary adjustments made to the vehicle in conformance with the minimum requirements of the Texas Vehicle Inspection Act, the required inspection fee may be charged and a rejection receipt shall be issued which lists the items rejected and other required information. The rejection receipt must be delivered and explained to the owner or operator of the vehicle.

The owner or operator of a vehicle rejected must make or have made the necessary adjustment or repairs and return to the original inspection station for one reinspection within fifteen (15) days from the date of rejection (excluding the day of rejection), in order to obtain the one reinspection without charge. The vehicle owner or operator shall have the right to remove the vehicle to such place for correction upon paying the inspection fee and has the exclusive right to determine by whom any repairs will be made. The customer should be informed of all defects necessary to put the vehicle in passing condition.

A Vehicle Inspection Report must be issued by the certified inspector for a vehicle presented for inspection that does not pass the inspection requirements. Vehicle Inspection Reports are an official part of the inspection program. All Vehicle Inspection Reports must be signed by the certified inspector, and the original given to the customer.

Any inspection station which, for any reason, cannot reinspect a vehicle to which that inspection station has issued a failing inspection report shall return the full inspection fee if charged. No vehicle will be rejected on any items not covered by the Vehicle Inspection Act.

A reinspection of a rejected vehicle by the initial inspection station shall only include a check of the items previously found defective unless any other obvious defects are noted. When a vehicle is repaired and returned for the one free reinspection within fifteen (15) days (excluding the day of rejection), no additional inspection fee may be charged. In the event the vehicle fails to pass this free reinspection, the inspection station's obligation is fulfilled. Any subsequent inspection shall be considered as a new inspection procedure. If the rejected vehicle is returned for reinspection to the original inspection station after the fifteen (15) days have elapsed from the date of rejection (excluding the day of rejection), or if the vehicle is presented to a different inspection station for reinspection, the vehicle will be handled as if it were being inspected for the first time.

4.20.38 Repairs.

The owner of a vehicle is under no obligation to have disclosed defects corrected by the inspection station. They may have the necessary work done where they desire or they may do it themselves. The inspection alone is all that is required. Although an owner has a right to have the necessary repairs or adjustments made wherever they wish, they

often show by their actions or remarks that they expect to secure a passing VIR from some other person without having the defects corrected. Please report this at once to the representative supervising your inspection station. Investigation of such cases by this Department will be the most effective way of protecting both the inspection stations which are honestly conducting inspections and the motoring public. The fee is for your work in making the inspections. You shall collect your inspection fee at the time of inspection whether the vehicle passes or fails inspection.

Inspection stations shall not in any manner attempt to require owners or operators of disapproved vehicles to have the vehicles repaired at the inspection station. The repairs necessary for approval may be made at any place chosen by the owner or operator of the vehicle. Any and all repairs or adjustments must be specifically authorized by the vehicle owner or operator before being made by any inspection station.

After a defect requiring repair is discovered by an Official Vehicle Inspection Station, the owner of the defective vehicle shall have the right to ask for, and receive, an estimate of the cost of parts and labor necessary to accomplish such repair if the Official Vehicle Inspection Station is in the business of making such repairs. Said estimate shall not in any way obligate the owner of the defective vehicle to have their vehicle repaired at the Official Vehicle Inspection Station, nor shall it create any right for the Official Vehicle Inspection Station to make such repairs.

Certain items of inspection require that established tolerances are necessary. It is necessary that every Official Vehicle Inspection Station inform the vehicle owner or operator of any borderline passage. This precaution should be taken in any instance where it can be of value to the owner of a vehicle for minimum conformance.

04.25.0 RECOMMENDED INSPECTION PROCEDURE

Recommended Inspection Procedure

*Check for evidence of Financial Responsibility/CNG tank expiration (if equipped) and/or documentation

Road Test

1. Check steering - lash and free movement (full turn without jamming)

2. Check brakes:

    a. Service - pedal reserve, stopping ability, and equalization

    b. Parking - holding ability

Inside the vehicle

1. Check head lamps - turn on - beam indicator and dimmer switch

2. Check horn - sound and actuating device

3. Check mirrors – view to the rear and mounting

4. Check seat belts - presence and condition.

5. Check turn signal lamps - switch and proper indication

6. Check windshield wipers - control and operation

Outside Vehicle

1. Check window tint (if required)

2. Check windshield wipers - required number and condition of blades

3. Check mirror - (mounting only if outside mirror required)

4. Check tail lamp(s) - operation and condition

5. Check stop lamp(s) - operation and condition

6. Check center high mount stop lamp – operation and condition

7. Check license plate lamp - operation and condition

8. Check reflectors - condition

9. Check turn signal lamps - operation and condition

10. Check head lamps - mounting, condition, and operation

11. Vehicles Over 80" in width - clearance lamps, side marker lamps, safety guards and flaps.

12. Check school buses - warning lamps, signs, fire extinguisher, crossover mirror, etc.

13. Check tires - tread depth and visible cuts

14. Check wheels and rims - defective or bent

Underneath the Vehicle

1. Check brake system for leaks

    a. Service - leaks, defective rods, or cables

    b. Parking - defective cables

4. Check catalytic converter - leaks, presence when required

5. Check exhaust system - muffler, exhaust pipe, tailpipe, mounting brackets, and hangers for presence and condition

Under the Hood

1. Check brakes - master cylinder fluid level - leaks

2. Check exhaust emission system - presence - if required

3. Check horn - mounting and wiring

4. Check exhaust system - manifold leaks

5. Check steering - belts - fluid level – leaks

6. Check motor number (if 1955 or earlier model)

Completion

1. Explain rejection should vehicle fail inspection.

2. Issue Vehicle Inspection Report, pass or fail.

Annex 1

NOTICE

EFFECTIVE January 1, 2011

PRIOR TO INSPECTION:

The owner or operator of a vehicle shall present evidence of financial responsibility to the inspection station in one of the following ways:

1. A liability insurance policy, or a copy of the policy, in at least the minimum amounts required by law (Texas minimum requirements are $30,000/$60,000/$25,000)

2. A standard proof of liability insurance form promulgated by the Texas Department of Insurance and issued by a liability insurer that includes:

- **A.** The name of the Insurer;
- **B.** The insurance policy number
- **C.** The policy period (dates of coverage and issued for 30 days or more);
- **D.** The name and address of each insured person;
- **E.** The policy limit or a statement that the coverage of the policy complies with at least the minimum amounts of liability insurance required by this Act; and,
- **F.** The make and model of each covered vehicle.

3. An insurance binder that confirms that the owner and/or operator is in compliance.

4. A copy of a certificate issued by the Department of Public Safety that shows that the vehicle is covered by self-insurance.

5. A certificate (or copy) issued by the State Comptroller that shows that the owner of the vehicle has on deposit with the comptroller money or securities in at least the amount required by law.

6. A certificate (or copy of a certificate) issued by the Department of Public Safety that shows that the vehicle is a vehicle for which a bond is on file with the Department.

7. A copy of a certificate issued by the County Judge where the vehicle is registered that shows that the owner has on deposit, cash or a cashier's check in at least the amount required by law.

***8. Texas Department of Motor Vehicle Carrier Registration Certificates (cab cards), including:

- **A.** Commercial Motor Vehicle Registration Certificates;
- **B.** Commercial Motor Vehicles registered under the Unified Carrier Registration (UCR) which is a paperless system, that must be checked on the website, www.safersys.org;
- **C.** Household goods carrier registration certificates
- **D.** Tow Truck Registration certificates

NOTE: Evidence of Financial Responsibility must be furnished for the TOWING VEHICLE of any trailer, semitrailer, or pole trailer presented for inspection.

AN INSPECTION CERTIFICATE MAY NOT BE ISSUED FOR A VEHICLE FOR WHICH THE OWNER OR OPERATOR FAILS TO FURNISH THE REQUIRED EVIDENCE OF FINANCIAL RESPONSIBILITY.

VEHICLES EXEMPT FROM THIS REQUIREMENT

1. GOVERNMENT VEHICLES: U.S., State, County, City
2. Vehicles registered to Volunteer Fire Departments
3. Vehicles registered with "Antique" License Plates

The general financial responsibility requirements for operating a motor vehicle in the State of Texas are found in Texas Transportation Code, Chapter 601. However, Texas Transportation Code, Section 601.007(c), provides that Chapter 601 does not apply to a motor vehicle that is subject to Texas Transportation Code, Chapter 643. Chapter 643 contains the financial responsibility requirements for operating a commercial motor vehicle in the State of Texas. The owner or operator of a commercial vehicle required to register with the Texas Department of Motor Vehicles under Chapter 643 shall present evidence of financial responsibility to the inspection station in one of the following ways:

Texas Department of Motor Vehicles Carrier Registration Certificates (Cab Cards), including:

- **A. Commercial Motor Vehicles Registration Certificates, which can be verified at the following website: http://twostepsonesticker.com/motor-carriers**
- **B. Commercial Motor Vehicles registered under the Unified Carrier Registration Act (UCR), which is a paperless system, that must be checked via the following website, www.safesys.org;**
- **C. Household Goods Carrier Registration Certificates**

Type of Motor Carrier Operation	Description	Minimum Insurance Requirement
1 - HAZ	**Transporters of Hazardous Substances (that require placarding)**	
	a. Hazardous substances, as defined in 49 Code of Federal Regulations (CFR) §171.8, transported in cargo tanks, portable tanks or hopper-type vehicles, with capacities in excess of 3,500 water gallons; or any quantity of Division 1.1, 1.2 and 1.3 materials, any quantity of Division 2.3, Hazard Zone A, or Division 6.1, Packing Group I, Hazard Zone A material; in bulk Division 2.1 or 2.2; or highway route controlled quantities of a Class 7 material, as defined in 49 CFR §173.403	$5,000,000
	b. Oil listed in 49 CFR §172.101: hazardous waste, hazardous materials and hazardous substances as defined in 49 CFR §171.8 and listed in 49 CFR §172.101, but not mentioned in paragraphs (a) or (b) of this subsection and petroleum products that are lubricants or fuels	$1,000,000
2 - BUS	**Commercial School Bus Operators**	
	For-hire school buses operating within the boundaries of a municipality and transporting preprimary, primary or secondary school students on a route between the students' residence and a public, private or parochial school or day-care facility	$500,000
3 - BUS	**Bus Operators**	
	a. Vehicles designed or used to transport more than 15 passengers (including the driver) but less than 26 passengers (not including the driver) b. Vehicles designed or used to transport 26 passengers or more (not including the driver)	$500,000 $5,000,000
4 - BUS	**Foreign Domiciled Bus Operators**	
	a. Vehicles designed or used to transport 15 passengers or less (including the driver) b. Vehicles designed or used to transport 16 passengers or more (including the driver)	$1,500,000 $5,000,000
5 - HHG	**Household Goods Movers**	
	a. Gross weight, registered weight or gross weight rating of 26,000 pounds or less b. Gross weight, registered weight or gross weight rating in excess of 26,000 pounds c. Cargo insurance must be filed on Form H & I with the following limits	$300,000 $500,000 Per Shipment $5,000 Aggregate $10,000
6	**Foreign Carriers**	
	(Domiciled outside of the U.S.A.) transporting cargo other than cargo listed above	$750,000
7 - OTHER	**All Others**	
	Private or for-hire motor carriers with a gross weight, registered weight or gross weight rating in excess of 26,000 pounds	$500,000

Tow Truck Registration Certificates - issued by the Texas Department of Licensing and Regulation – which can be verified at the following website: http://www.license.state.tx.us/LicenseSearch/

Annex 2

Readjustment limits. The maximum pushrod stroke must not be greater than the values given in the tables below. Any brake stroke exceeding the readjustment limit shall be cause for rejection. Stroke shall be measuredwith engine off and reservoir pressure of 80 to 90 psi with brakes fully applied. For actuator types not listed inthese tables, the pushrod stroke must not be greater than 80 percent of the rated stroke marked on the actuator by the actuator manufacturer, or greater than the readjustment limit marked on the actuator by the actuator manufacturer.

CLAMP-TYPE BRAKE CHAMBERS

Type	Effective Area (square inch)	Outside Diameter (inch)	Brake Readjustment Limit
6	4 1/2 in. (114 mm)	1 1/4 in. (31.8 mm)	
9	5 1/4 in. (34.9 mm)	1 3/8 in. (34.9 mm)	
12	5 11/16 in. (145 mm)	1 3/8 in. (34.9 mm)	1 3/4 in. (44.5 mm)
16	6 3/8 in. (162 mm)	1 3/4 in. (44.5 mm)	2 in. (50.8 mm)
20	6 25/32 in. (172 mm)	1 3/4 in. (44.5 mm)	2 in. (50.8 mm) 2 1/2 in. (63.5 mm)*
24	7 7/32 in. (184 mm)	1 3/4 in. (44.5 mm)	2 in. (50.8 mm) 2 1/2 in. (63.5 mm)**
30	8 3/32 in. (206 mm)	2 in. (50.8 mm)	2 1/2 in. (63.5 mm)
36	9 in. (229 mm)	2 1/4 in. (57.2 mm)	

* - For type 20 chambers with a 3-inch (76 mm) rated stroke.
** - For type 24 chambers with a 3-inch (76 mm) rated stroke.

BOLT-TYPE BRAKE CHAMBERS

Type	Outside Diameter	Brake Readjustment Limit
A	6 15/16 in. (176 mm)	1 3/8 in. (34.9 mm)
B	9 3/16 in. (234 mm)	1 3/4 in. (44.5 mm)
C	8 1/6 in. (205 mm)	1 3/4 in. (44.5 mm)
D	5 1/4 in. (133 mm)	1 1/4 in. (31.8 mm)
E	6 3/16 in. (157 mm)	1 3/8 in. (34.9 mm)
F	11 in. (279 mm)	2 1/4 in. (57.2 mm)
G	9 7/8 in. (251 mm	2 in. (50.8 mm)

ROTOCHAMBER-TYPE BRAKE CHAMBERS

Type	Outside Diameter	Brake Readjustment Limit
9	4 9/32 in. (109 mm)	1 1/2 in. (38.1 mm)
12	4 13/16 in. (122 mm)	1 1/2 in. (38.1 mm)
16	5 13/32 in. (138 mm)	2 in. (50.8 mm)
20	5 15/16 in. (151 mm)	2 in. (50.8 mm)
24	6 13/32 in. (163 mm)	2 in. (50.8 mm)
30	7 1/16 in. (180 mm)	2 1/4 in. (57.2 mm)
36	7 5/8 in. (194 mm)	2 3/4 in. (69.9 mm)
50	8 7/8 in. (226 mm)	3 in. (76.2 mm)

BENDIX DD-3 BRAKE CHAMBERS

Type	Outside Diameter	Brake Readjustment Limit
30	8 1/8 in. (206 mm)	2 1/4 in. (57.2 mm)

WEDGE BRAKES – Movement of the scribe mark on the lining shall not exceed 1/16 inch.

BRAKE STOPPING DISTANCE

CLASSIFICATION OF VEHICLES	BRAKING FORCE AS A PERCENTAGE OF GROSS VEHICLE OR COMBINATION WEIGHT	DECELERATION IN FEET PER SECOND	BRAKE SYSTEM APPLICATION AND BRAKE DISTANCE IN FEET FROM AN INITIAL SPEED OF 20 MPH
PASSENGER VEHICLES WITH A SEATING CAPACITY OF 10 PEOPLE OR LESS, INCLUDING THE DRIVER, NOT HAVING A MANUFACTURER'S GROSS VEHICLE WEIGHT RATING	52.8%	17	25
SINGLE UNIT VEHICLE WITH A MANUFACTURER'S GROSS WEIGHT RATING OF 10,000 POUNDS OR LESS	43.5%	14	30
SINGLE UNIT VEHICLE WITH A MANUFACTURER'S GROSS WEIGHT RATING OF MORE THAN 10,000 POUNDS	43.5%	14	40
COMBINATION OF TWO AXLE TOWING VEHICLE AND A TRAILER WITH A WEIGHT OF 3,000 POUNDS OR LESS	43.5%	14	40
BUSES, REGARDLESS OF THE NUMBER OF AXLES, NOT HAVING A MANUFACTURER'S GROSS WEIGHT RATING	43.5%	14	40
ALL COMBINATIONS OF VEHICLES IN DRIVEAWAY-TOWAWAY OPERATIONS	43.5%	14	40
ALL OTHER VEHICLES AND COMBINATION OF VEHICLES	43.5%	14	50

Figure 1 - Truck Tractor Illustration for §393.11

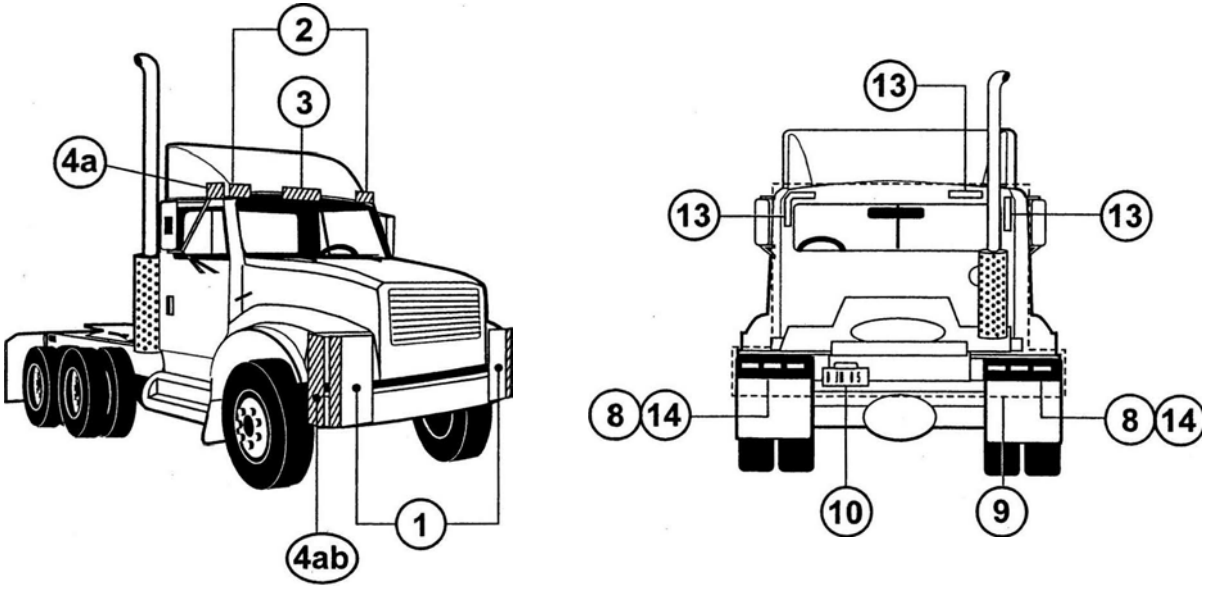

Figure 2 - Straight Truck Illustration for §393.11

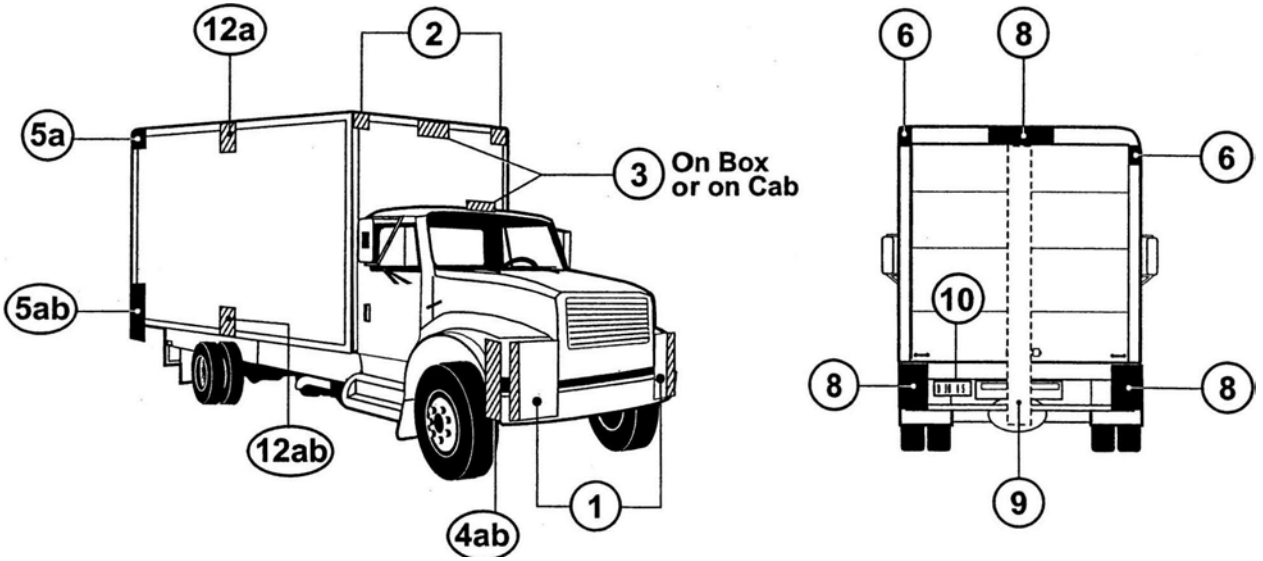

Figure 3 - Straight Truck Illustration for §393.11

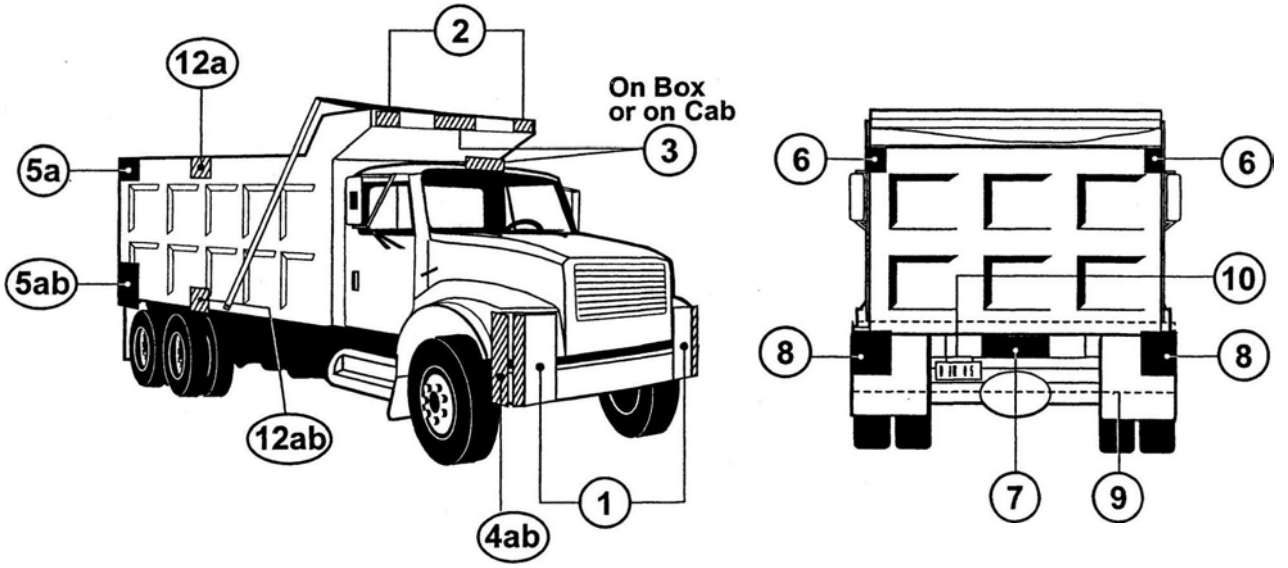

Figure 4 - Straight Truck Illustration for§393.11

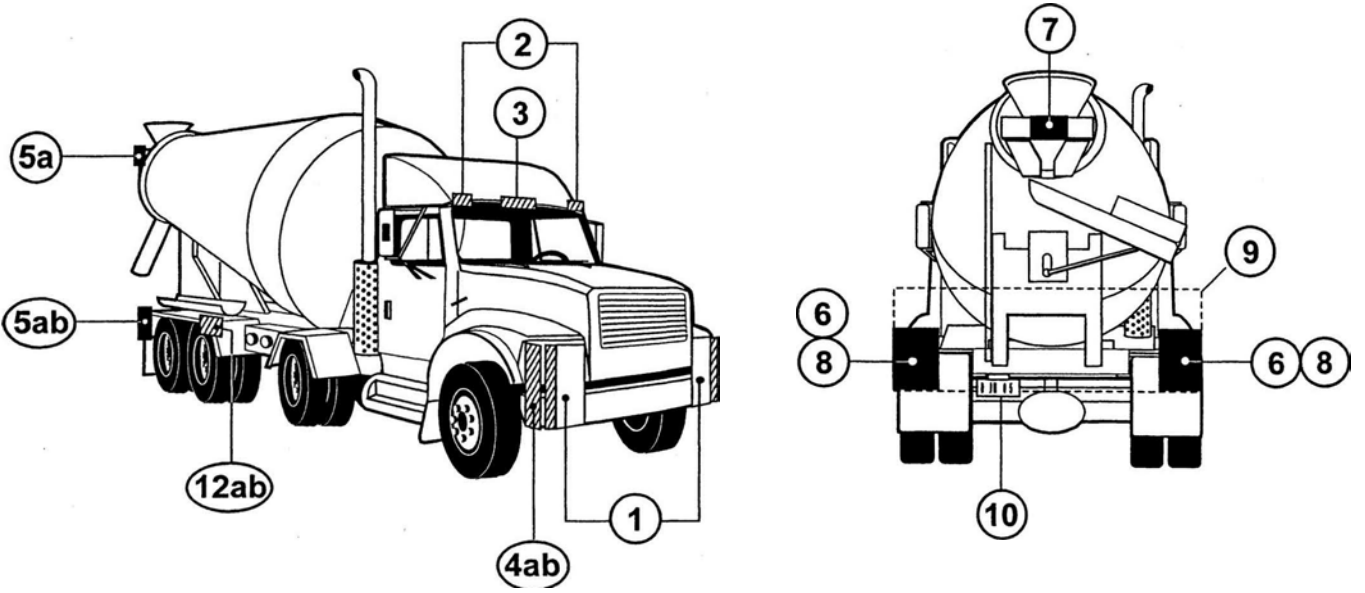

Figure 5 - Straight Truck Illustration for §393.11

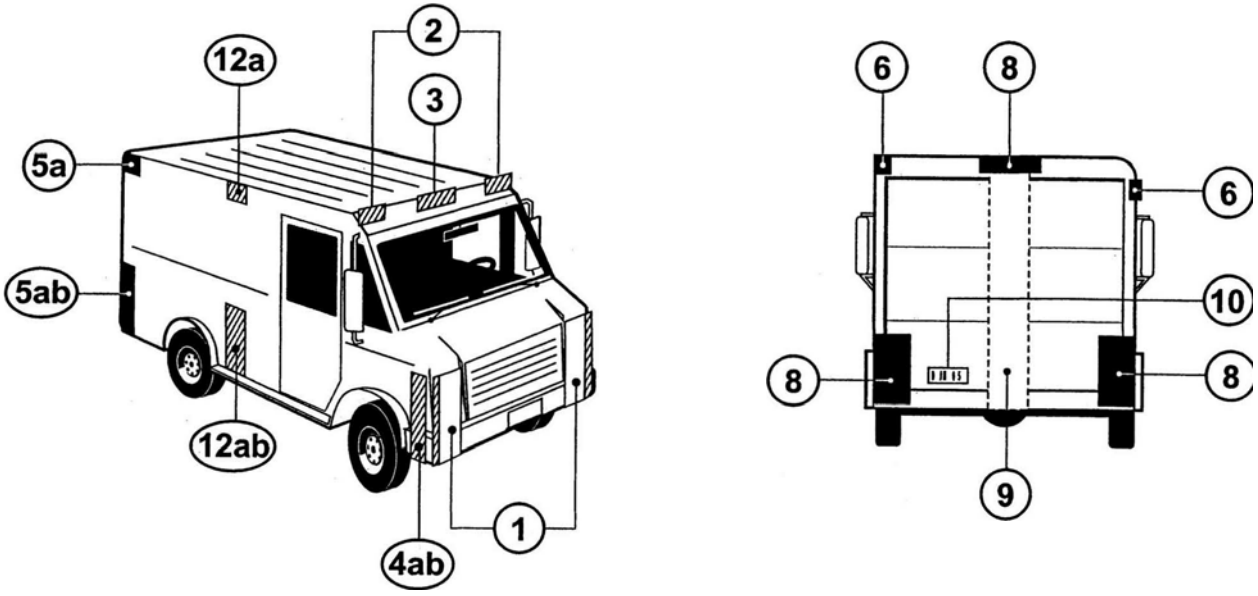

Figure 6 - Straight Truck Illustration for §393.11

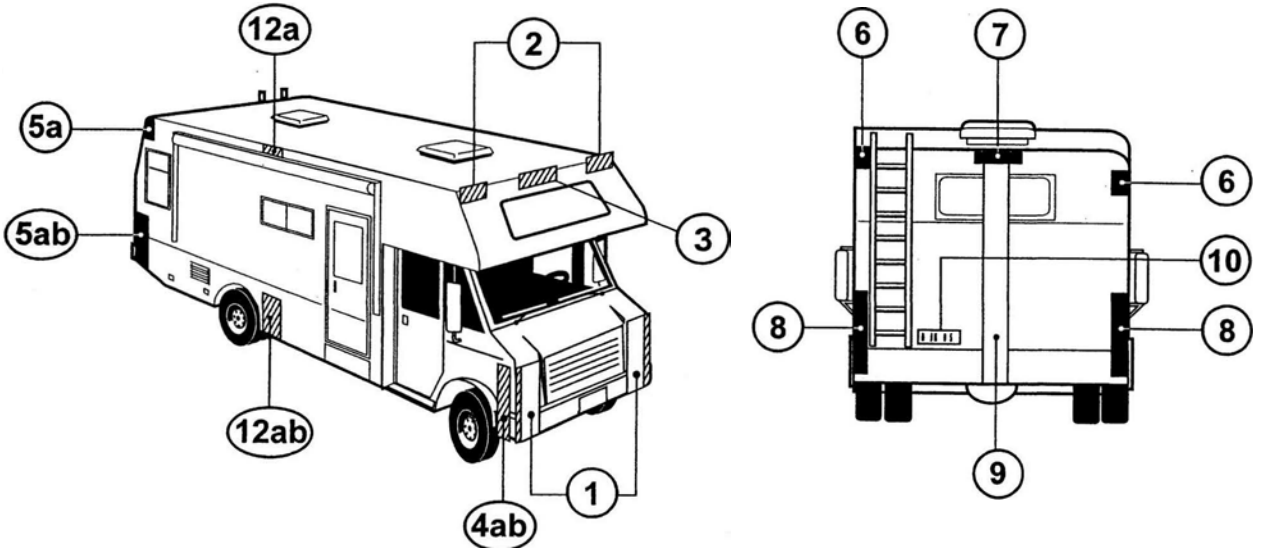

Figure 7 - Bus Illustration for §393.11

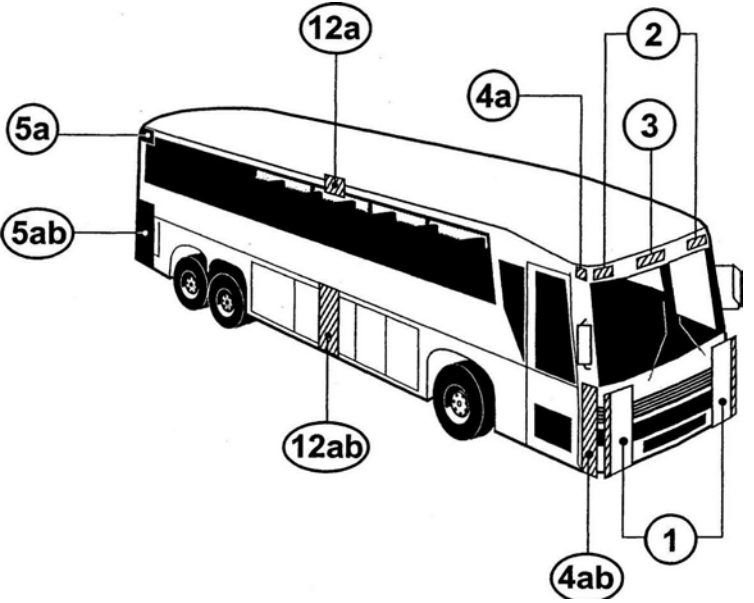

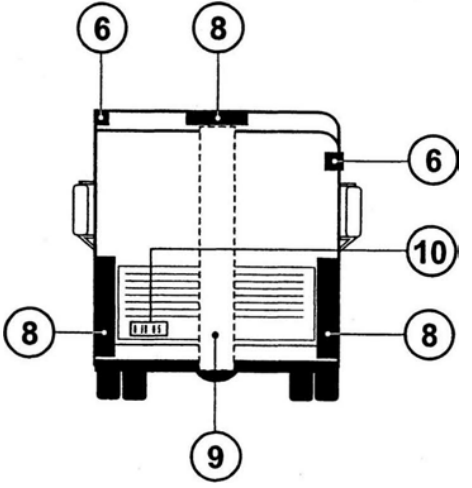

Figure 8 - Semi-Trailer Illustration for §393.11

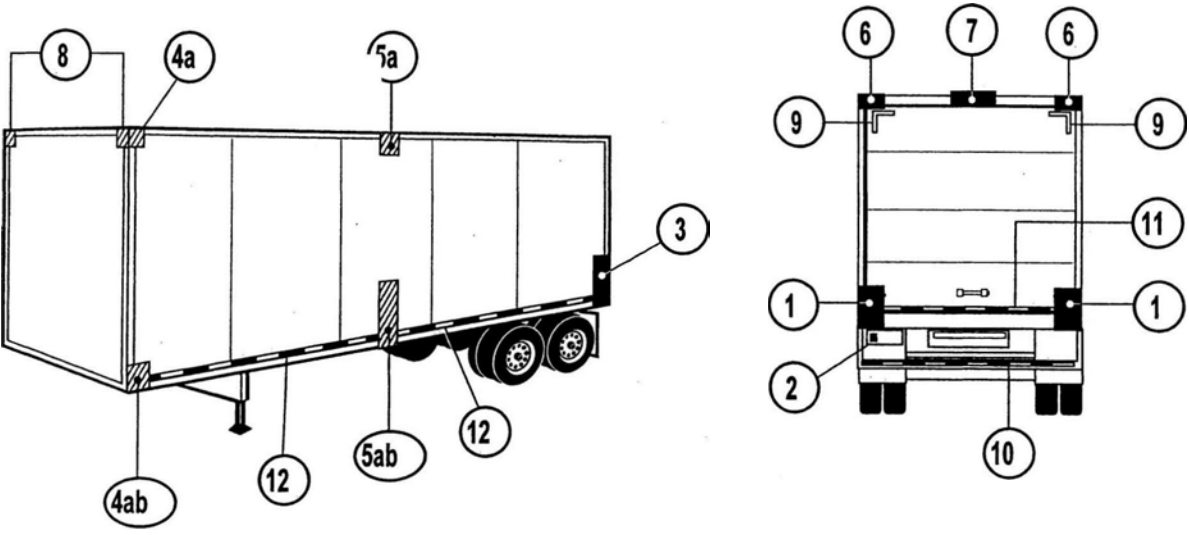

Figure 9 - Semi-Trailer Illustration for §393.11

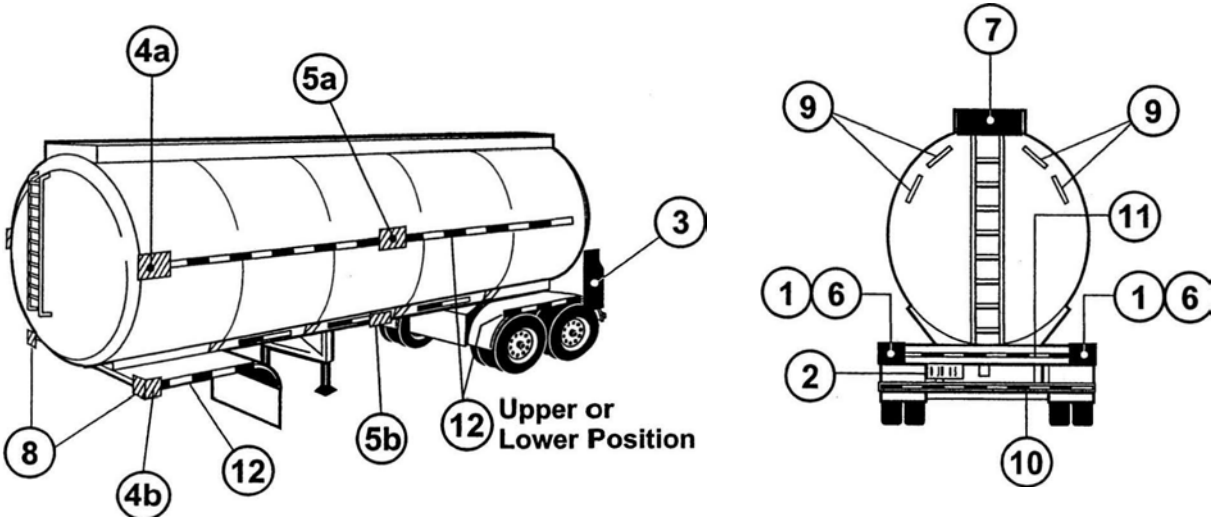

Figure 10 - Semi-Trailer Illustration for §393.11

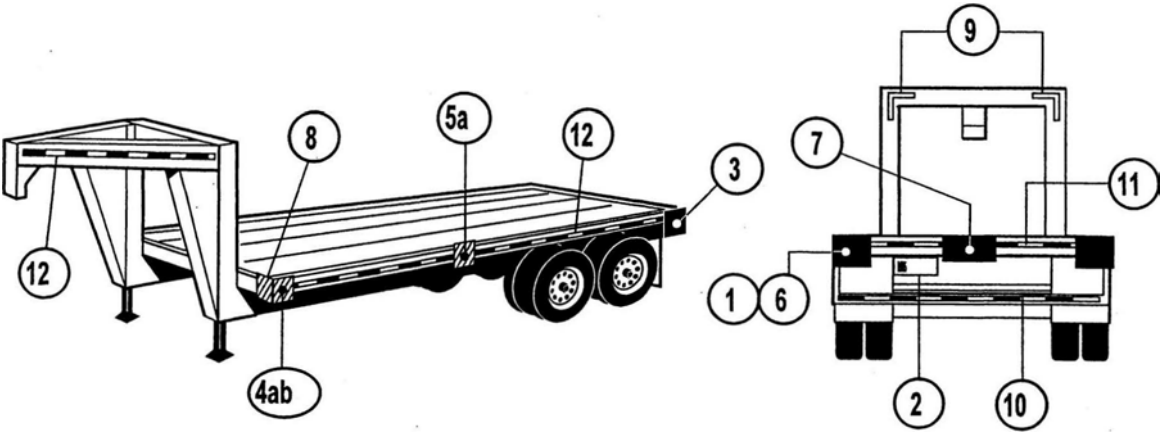

Figure 11 - Container Chassis Illustration for §393.11

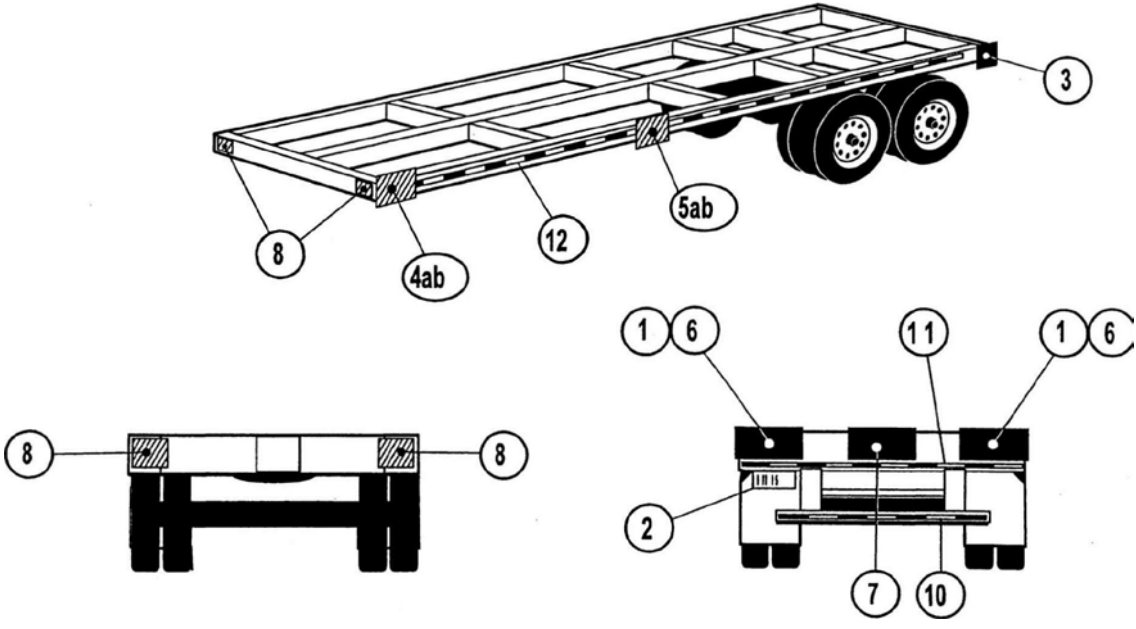

Front

Rear

Figure 12 - Pole Trailer Illustration for §393.11 - All Vehicle Widths

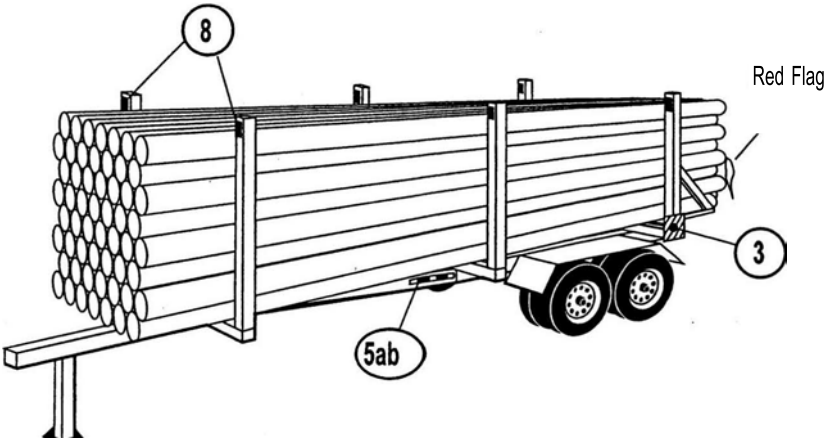

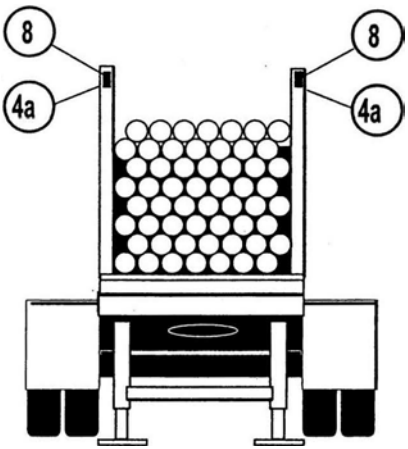

Front of Vehicle

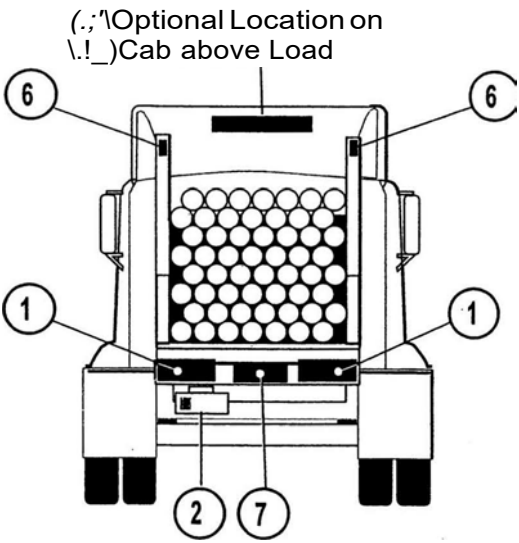

Rear of Vehicle
(Including Truck Cab)

Figure 13 - Converter Dolly Illustration for §393.11

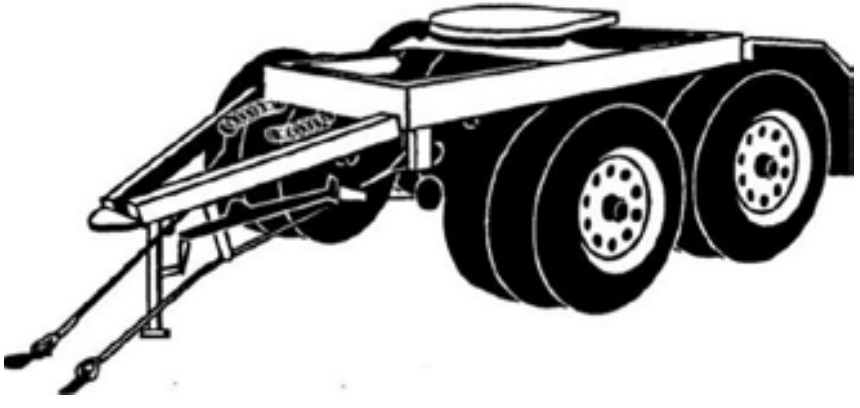

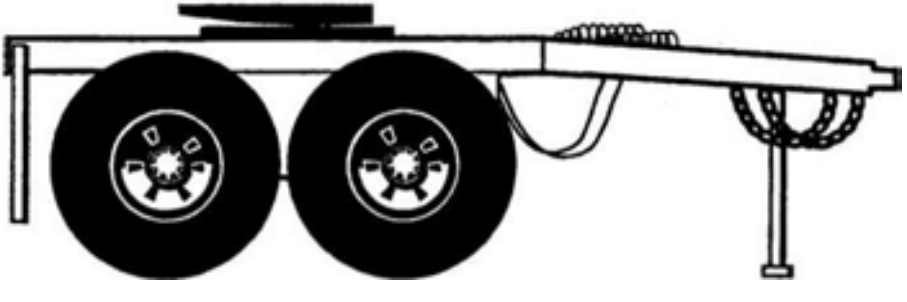

Side View of Dolly

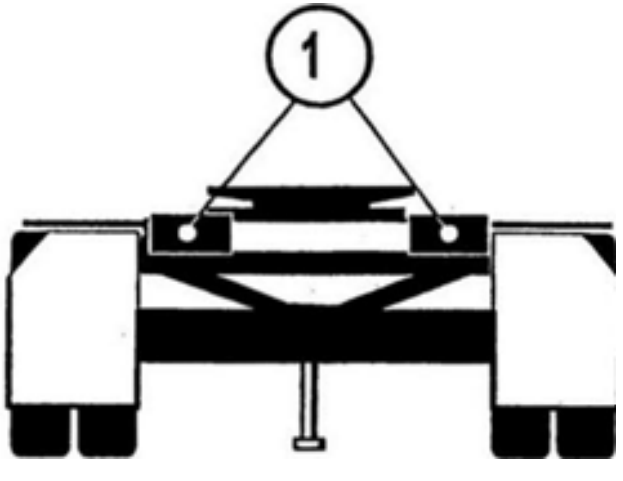

Rear

Figure 14 - Semi-Trailer Illustration for §393.11

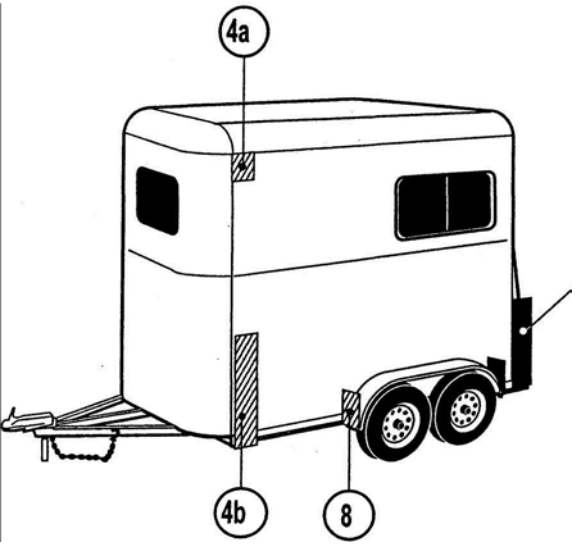

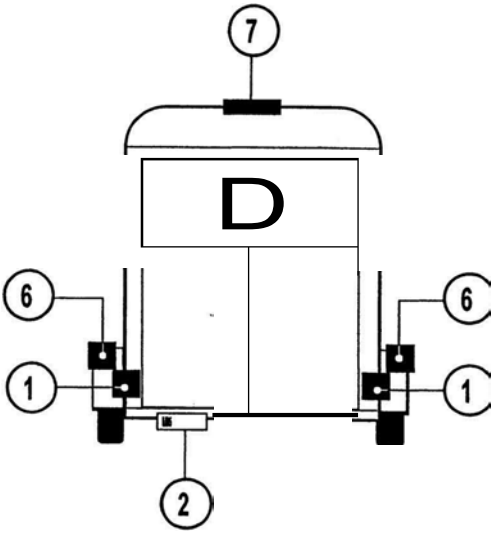

Figure 15 - Semi-Trailer Illustration for § 393.11

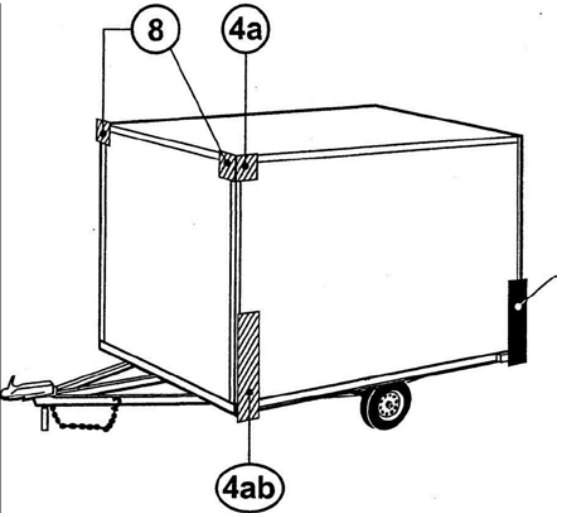

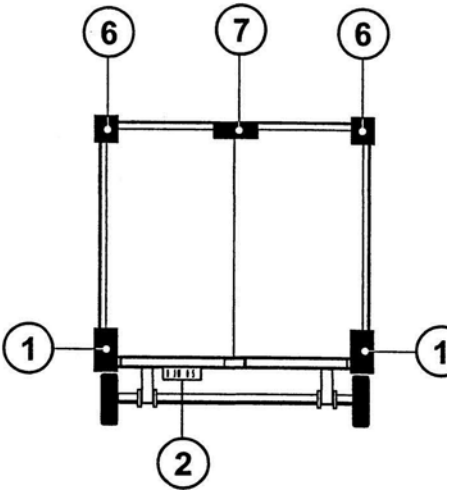

Figure 16 - Semi-Trailer Illustration for §393.11

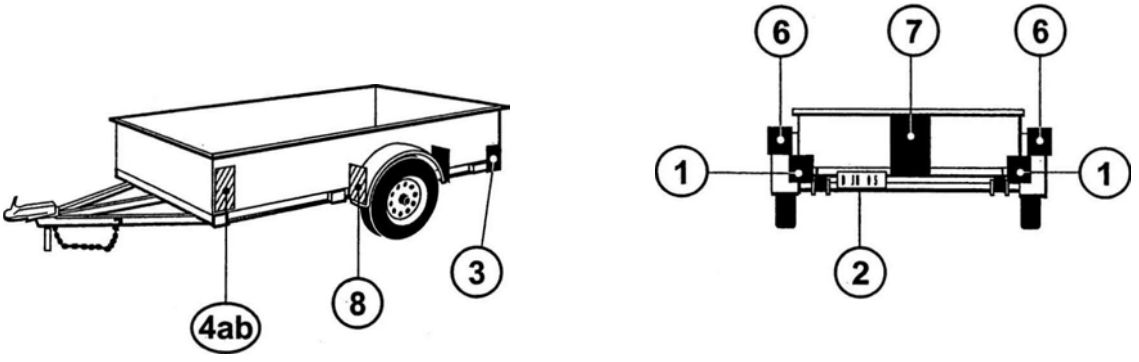

Figure 17 - Semi-Trailer Illustration for §393.11

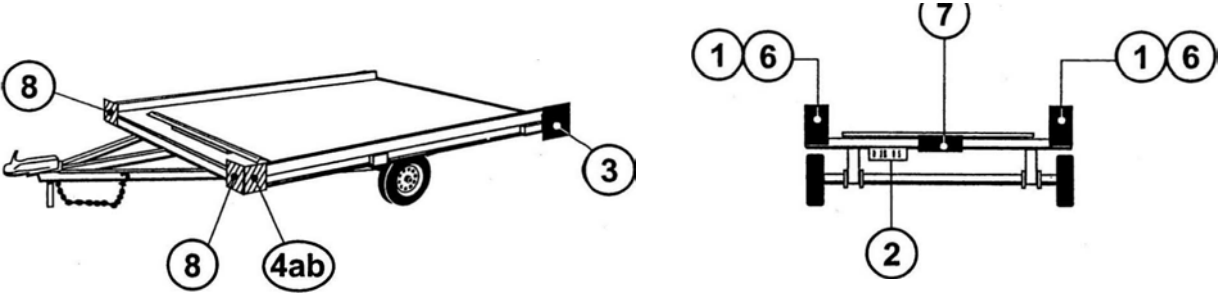

Figure 18 - Semi-Trailer Illustration for §393.11

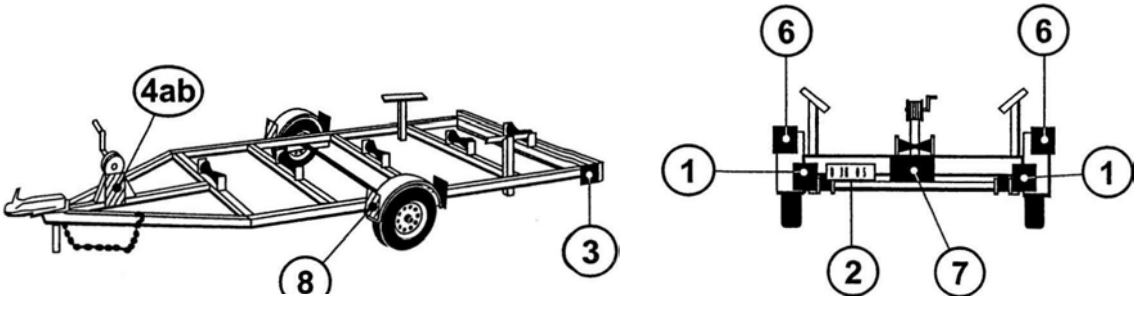

LEGEND FOR FIGURES 1 THROUGH 7-49 CFR 393.11
TRUCK & BUS VEHICLE ILLUSTRATIONS

{DOES NOT APPLY TO FIGURES 8 THROUGH 18 FOR TRAILERS)

Area	Equipment
	Headlamps • Lower Beam
	Headlamps • Upper Beam
	Parking Lamps • Attention: *Required only on vehicles less than 2032mm wide*
2	Front Tum SignaUHazard Warning Lamps
3	Front Clearance Lamps ·Attention: *Required for vehicles 2032mm wide or wider*
4a	Front Identification Lamps (10)
4b	Front Side Marker Lamps
5a	Front Side Reflex Reflectors
5b	Rear Side Marker Lamps • *Not required on Truck Tractors*
6	Rear Side Reflex Reflectors • *Not required on Truck Tractors*
	Rear Clearance Lamps Attention: *Required for vehicles 2032mm wide or wider, but not required on Trock Tractors*
7	Rear Identification Lamps (10) Attention: *Required for vehicles 2032mm wide or wider, but not required on Trock Tractors*
8	Tail Lamps Stop Lamps Rear Turn Signal/Hazard Warning Lamps
9	Rear Reflex Reflectors
10	Backup Lamp
	License Plate Lamp
R	Center High Mounted Stop Lamp Attention: *Required for vehicles less than 2032mm wide and 4536kg*

ADDITIONAL EQUIPMENT FOR SPECIFIC TRUCKS AND BUS VEHICLES

Area	Equipment
	Intermediate Side Marker Lamps
	Intermediate Side Reflex Reflectors

TRUCK TRACTORS

Area	DESCRIPTION Conspicuity Treatment
R	Rear Upper Body Marking
	Rear Marking

LEGEND FOR FIGURES 8 THROUGH 18 • 49 CFR 393.11 TRAILER ILLUSTRATIONS

(DOES NOT APPLY TO FIGURES 1THROUGH 7 FOR TRUCKS & BUSES)

Area	Equipment
1	**Tail Lamps**
	Stop Lamps
	Rear Turn Signal Lamps
	Rear Reflex Reflectors
2	License Plate Lamp (s)
3	Rear Side Marker Lamps
	Rear Side Reflex Reflectors
4a	Front Side Marker Lamps
4b	Front Side Reflex Reflectors

ADDITIONAL EQUIPMENT FOR TRAILERS EXCEEDING THE FOLLOWING PARAMETERS

LENGTH 9.1 m (30 ft.) OR LONGER

Area	Equipment
	Intermediate Side Marker Lamps
	Intermediate Side Reflex Reflectors

WIDTH 2.032 m (80 in.) OR WIDER

Area	Equipment
6	Rear Clearance Lamps
7	Rear Identification Lamps
8	Front Clearance Lamps

WIDTH 2.032 m (80 in.) OR WIDER AND GVWR 4,536 kg (10,000 lb.) ORMORE .

	DESCRIPTION
Area	Conspicuity Treatment
9	Rear Upper Body Marking
10	Bumper Bar Marking
11	Rear Lower Body Marking
12	Side Marking

FMCSA's Conspicuity Requirements for Commercial Motor Vehicles

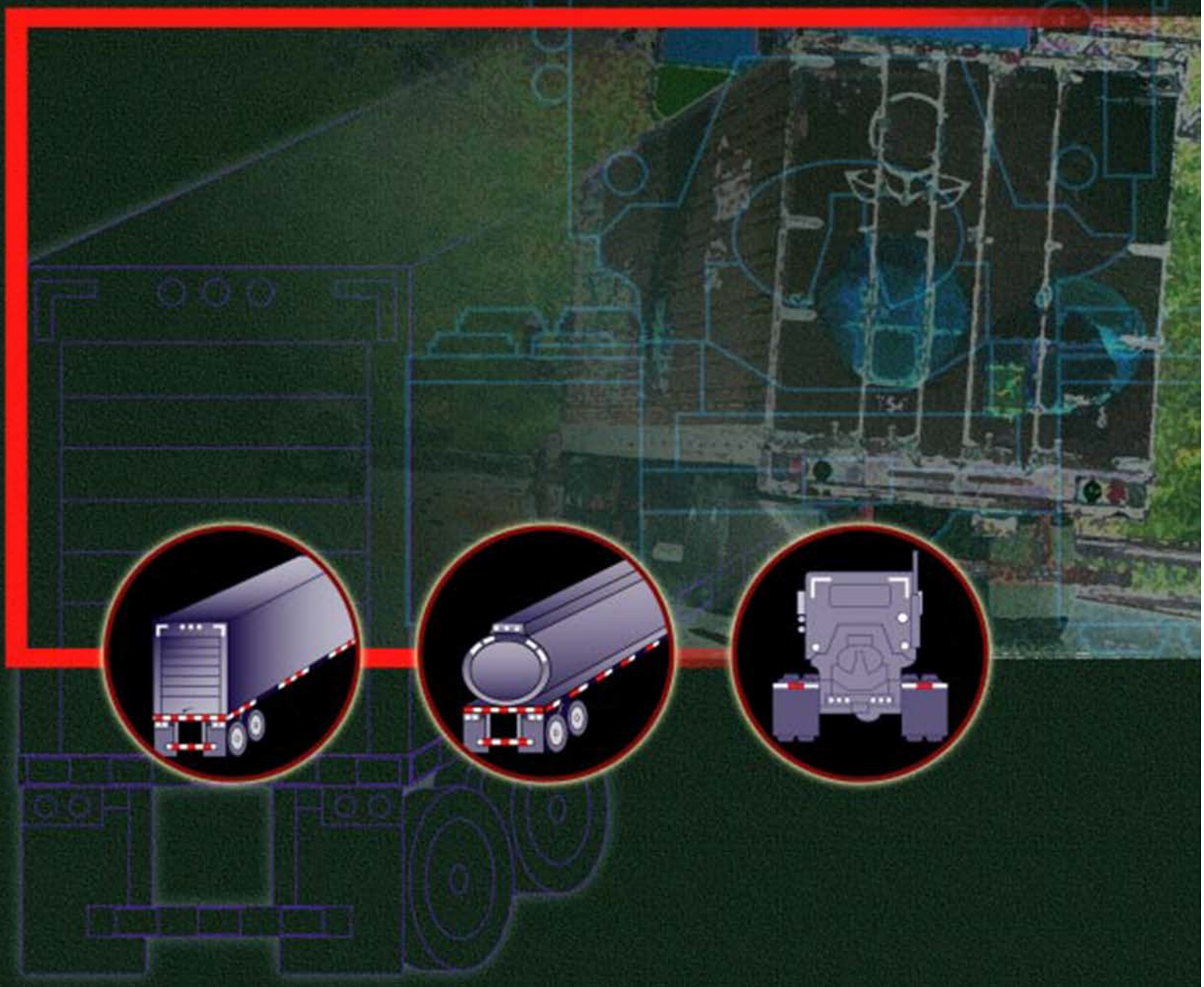

U.S. Department of Transportation
Federal Motor Carrier Safety Administration

FMCSA

Introduction

The FMCSA has regulations requiring the use of conspicuity materials (i.e., retroreflective sheeting (or reflex reflectors)) on trailers and the rear of truck tractors. The rules are intended to reduce the incidence of motorists crashing into the sides or rear of trailers at nighttime and under other conditions of reduced visibility, and to reduce the incidence of motorists rear-ending truck tractors (being operated without trailers) under the same conditions.

There are three separate groups of commercial motor vehicles subject to the FMCSA's requirements and the date of manufacture for the vehicle must be known to determine the applicability of the rules to the vehicle. The rules cover trailers manufactured on or after December 1, 1993, the retrofitting of trailers built before that date, and truck tractors built on or after July 1, 1997.

Requirements for Trailers Manufactured on or After December 1, 1993 (49 CFR 393.11)

On December 10, 1992, the National Highway Traffic Safety Administration (NHTSA) published a final rule requiring that trailers manufactured on or after December 1, 1993, which have an overall width of 2,032 mm (80 inches) or more and a gross vehicle weight rating (GVWR) of more than 4,536 kg (10,000 pounds), except pole trailers and trailers designed exclusively for living or office use, be equipped on the sides and rear with a means for making them more visible on the road.

The NHTSA rule allows trailer manufacturers to install either red and white retroreflective sheeting or reflex reflectors. Manufacturers of retroreflective sheeting or reflectors are required to certify compliance of their product with Federal Motor Vehicle Safety Standard (FMVSS) No. 108 (49 CFR 571.108) whether the product is for use as original or replacement equipment.

The manufacturers certification will consist of one of the following markings depending on the type of conspicuity material:

DOT-C Rectangular reflex reflectors certified as meeting the standard.

DOT-C2 50 millimeter (mm) wide retroreflective sheeting material certified as meeting the standard.

DOT-C3 75 mm wide retroreflective sheeting certified as meeting the standard.

DOT-C4 100 mm wide retroreflective sheeting certified as meeting the standard.

Currently, §393.11 requires that all lamps and reflective devices on motor vehicles placed in operation after March 7, 1989, meet the requirements of FMVSS No. 108 in effect on the date of manufacture. Therefore, trailers manufactured on or after December 1, 1993, must have reflective devices of the type and in the locations specified by FMVSS No. 108, including the conspicuity treatments.

Locations for Conspicuity Treatment

The following is a description of where the conspicuity treatments have to be located on trailers. Illustrations of conspicuity treatments on some common types of trailers are also provided at the end of this publication.

Sides of the trailer

The retroreflective sheeting (or reflex reflectors) required by § 393.11 (through its cross reference to FMVSS No. 108) must be applied to each side of the trailer or semitrailer. Each strip of retroreflective sheeting (or reflex reflector) must be positioned as horizontally as practicable, beginning and ending as close to the front and rear as practicable. The conspicuity treatment is not required to be continuous. However, the sum of the length of all of the segments must be at least half of the length of the trailer and the spaces between the segments of the strip must be distributed as evenly as practicable. The centerline for each strip of retroreflective sheeting (or reflex reflector) must be between 375 mm (15 inches) and 1,525 mm (60 inches) above the road surface when measured with the trailer empty or unladen, or as close as practicable to this area.

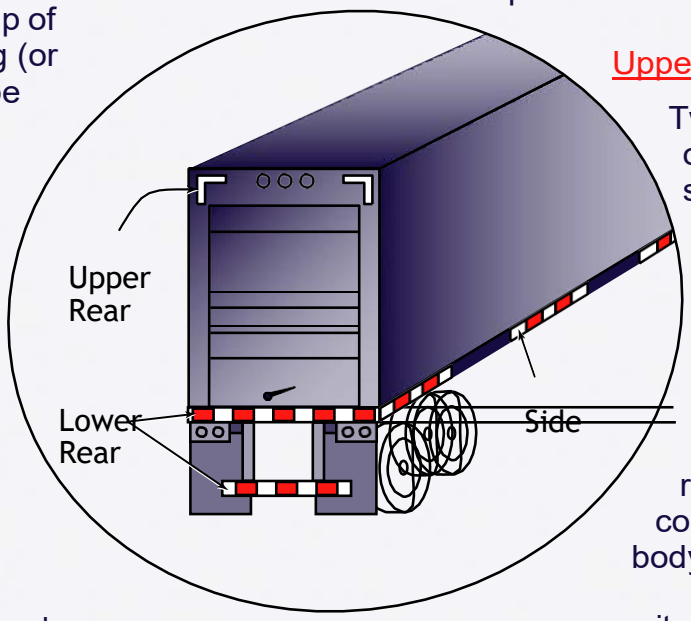

If necessary to clear rivet heads or other similar obstructions, 50 mm (2 inches) wide retroreflective sheeting may be separated into two 25 mm (1 inch) wide strips of the same length and color, separated by a space of not more than 25 mm (1 inch).

Lower rear area of the trailer

The rear of each trailer and semitrailer must be equipped with retroreflective sheeting (or reflex reflectors). Each strip of retroreflective sheeting (or reflex reflector) must be positioned as horizontally as practicable, extending across the full width of the trailer, beginning and ending as close to the extreme edges as practicable. The centerline for each of the strips of retroreflective sheeting (or each reflex reflector) must be between 375 mm (15 inches) and 1,525 mm (60 inches) above the road surface when measured with the trailer empty or unladen, or as close as practicable to this area.

Upper rear area of the trailer

Two pairs of white strips of retroreflective sheeting (or reflex reflectors), each pair consisting of strips 300 mm (12 inches) long, must be positioned horizontally and vertically on the right and left upper corners of the rear of the body of each trailer and semitrailer, as close as practicable to the top of the trailer and as far apart as practicable. If the perimeter of the body, as viewed from the rear, is not square or rectangular, the conspicuity treatments may be applied along the perimeter, as close as practicable to the uppermost and outermost areas of the rear of the body on the left and right sides.

Requirements for Trailers Manufactured Before December 1, 1993 (49 CFR 393.13)

On March 31, 1999, the Federal Motor Carrier Safety Regulations (FMCSRs) were amended to require that motor carriers engaged in interstate commerce install retroreflective tape or reflex reflectors on the sides and rear of semitrailers and trailers that were manufactured prior to December 1,1993, have an overall width of 2,032 mm (80 inches) or more, and a gross vehicle weight rating (GVWR) of 4,536 kg (10,001 pounds) or more. As a result of that final rule, motor carriers must install retroreflective tape or reflex reflectors on their older trailers by June 1, 2001. The FMCSA is allowing motor carriers a certain amount of flexibility in terms of the colors or color combinations until June 1, 2009, but requires that all older trailers be equipped with conspicuity treatments identical to those mandated for new trailers by 2009. The retrofitting requirements may be found at 49 CFR 393.13.

In the simplest terms, the locations at which the conspicuity materials must be placed on the older trailers is the same as the trailers manufactured on or after December 1, 1993. The only differences are that: flexibility is allowed in terms of the color, there is no requirement for certification marking on the conspicuity material, and there is no requirement for conspicuity materials on the rear impact guard.

Special Note on the Use of Conspicuity Treatments In Lieu of Reflex Reflectors on Trailers

Trailers which are equipped with conspicuity material which meets the requirements of FMVSS No. 108 are not required to be equipped with the reflex reflectors listed in the regulations if —

(i) The conspicuity material is placed at the locations where reflex reflectors are required; and

(ii) The conspicuity material when installed on the motor vehicle meets the geometric visibility requirements for the reflex reflectors.

Requirements for Truck Tractors Manufactured After July 1, 1997 (§ 393.11)

On August 8, 1996, the NHTSA published a final rule requiring that truck tractors manufactured on or after July 1, 1997, be equipped with red-and-white retroreflective material similar to that required on the rear of the trailers they tow to increase nighttime conspicuity. Manufacturers may choose either retroreflective sheeting or reflex reflectors. In the case of truck tractors delivered with a temporary mudflap arrangement rather than permanent equipment, the requirement for retroreflective material near the top of the

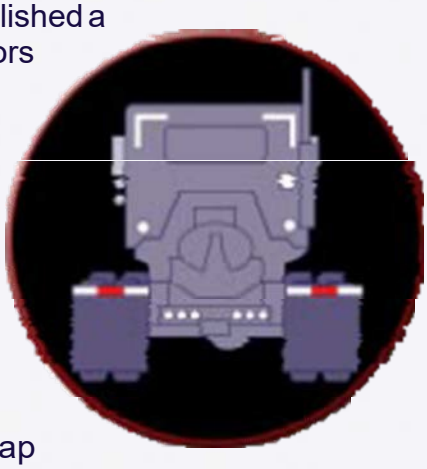

mudflap may be satisfied with material carried by the temporary mudflap brackets that are transferable to the permanent mudflap system. Retroreflective material isalso required near the top of the cab in a pattern similar to that used on trailers.

Currently, § 393.11 requires that all lamps and reflective devices on motor vehicles placed in operation after March 7, 1989, meet the requirements of FMVSS No. 108 in effect on thedate of manufacture. Therefore, truck tractors manufactured on or after July 1, 1997, must have reflectivedevices of the type and in the locations specified by FMVSS No. 108,including the conspicuity treatments.

Reprint of Retrofitting Requirements and Examples of Conspicuity Treatments

§ 393.13 Retroreflective Sheeting and Reflex Reflectors Requirements for Semitrailers and Trailers Manufactured Before December 1, 1993.

(a) Applicability

All trailers and semitrailers manufactured prior to December 1, 1993, which have an overall width of 2,032 mm (80 inches) or more and a gross vehicle weight rating of 4,536 kg (10,001 pounds) or more, except trailers that are manufactured exclusively for use as offices or dwellings, pole trailers (as defined in § 390.5), and trailers transported in a driveaway-towaway operation, must be equipped with retroreflective sheeting or an array of reflex reflectors that meet the requirements of this section. Motor carriers have until June1, 2001 to comply with the requirements of this section.

(b) Retroreflective sheeting and reflex reflectors

Motor carriers are encouraged to retrofit their trailers with a conspicuity system that meets all of the requirements applicable to trailers manufactured on or after December 1, 1993, including the use of retroreflective sheeting or reflex reflectors in a red and white pattern (see Federal Motor Vehicle Safety Standard No. 108 (49 CFR 571.108), S5.7, Conspicuity systems). Motor carriers which do not retrofit their trailers to meet the requirements of FMVSS No. 108, for example by using an alternative color pattern, must comply with the remainder of this paragraph and with paragraph (c) or (d) of this section. Retroreflective sheeting or reflex reflectors in colors or color combinations other than red and white may be used on the sides or lower rear area of the semitrailer or trailer until June 1, 2009. The alternate color or color combination must be uniform along the sides and lower rear area of the trailer. The retroreflective sheeting or reflex reflectors on the upper rear area of the trailer must be white and conform to the requirements of FMVSS No. 108 (S5.7). Red retroreflective sheeting or reflex reflectors shall not be used along the sides of the trailer unless it is used as part of a red and white pattern. Retroreflective sheeting shall have a width of at least 50 mm (2 inches).

(c) Locations for retroreflective sheeting

(1) Sides

Retroreflective sheeting shall be applied to each side of the trailer or semitrailer. Each strip of retroreflective sheeting shall be positioned as horizontally as practicable, beginning and ending as close to the front and rear as practicable. The strip need not be continuous but the sum of the length of all of the segments shall be at least half of the length of the trailer and the spaces between the segments of the strip shall be distributed as evenly as practicable. The centerline for each strip of retroreflective sheeting shall be between 375 mm (15 inches) and 1,525 mm (60 inches) above the road surface when measured with the trailer empty or unladen, or as close as practicable to this area. If necessary to clear rivet heads or other similar obstructions, 50 mm (2 inches) wide retroreflective sheeting may be separated into two 25 mm (1 inch) wide strips of the same length and color, separated by a space of not more than 25 mm (1 inch).

(2) Lower rear area

The rear of each trailer and semitrailer must be equipped with retroreflective sheeting. Each strip of retroreflective sheeting shall be positioned as horizontally as practicable, extending across the full width of the trailer, beginning and ending as close to the extreme edges as practicable. The centerline for each of the strips of retroreflective sheeting shall be between 375 mm (15 inches) and 1,525 mm (60 inches) above the road surface when measured with the trailer empty or unladen, or as close as practicable to this area.

(3) Upper rear area

Two pairs of white strips of retroreflective sheeting, each pair consisting of strips 300 mm (12 inches) long, must be positioned horizontally and vertically on the right and left upper corners of the rear of the body of each trailer and semitrailer, as close as practicable to

the top of the trailer and as far apart as practicable. If the perimeter of the body, as viewed from the rear, is not square or rectangular, the strips may be applied along the perimeter, as close as practicable to the uppermost and outermost areas of the rear of the body on the left and right sides.

(d) Locations for reflex reflectors

(1) Sides

Reflex reflectors shall be applied to each side of the trailer or semitrailer. Each array of reflex reflectors shall be positioned as horizontally as practicable, beginning and ending as close to the front and rear as practicable. The array need not be continuous but the sum of the length of all of the array segments shall be at least half of the length of the trailer and the spaces between the segments of the strip shall be distributed as evenly as practicable. The centerline for each array of reflex reflectors shall be between 375 mm (15 inches) and 1,525 mm (60 inches) above the road surface when measured with the trailer empty or unladen, or as close as practicable to this area. The center of each reflector shall not be more than 100 mm (4 inches) from the center of each adjacent reflector in the segment of the array. If reflex reflectors are arranged in an alternating color pattern, the length of reflectors of the first color shall be as close as practicable to the length of the reflectors of the second color.

(2) Lower rear area

The rear of each trailer and semitrailer must be equipped with reflex reflectors. Each array of reflex reflectors shall be positioned as horizontally as practicable, extending across the full width of the trailer, beginning and ending as close to the extreme edges as practicable. The centerline for each array of reflex reflectors shall be between 375 mm (15 inches) and 1,525 mm (60 inches) above the road surface when measured with the trailer empty or unladen, or as close as practicable to this area. The center of each reflector shall not be more than 100 mm (4 inches) from the center of each adjacent reflector in the segment of the array.

(3) Upper rear area

Two pairs of white reflex reflector arrays, each pair at least 300 mm (12 inches) long, must be positioned horizontally and vertically on the right and left upper corners of the rear of the body of each trailer and semitrailer, as close as practicable to the top of the trailer and as far apart as practicable. If the perimeter of the body, as viewed from the rear, is not square or rectangular, the arrays may be applied along the perimeter, as close as practicable to the uppermost and outermost areas of the rear of the body on the left and right sides. The center of each reflector shall not be more than 100 mm (4 inches) from the center of each adjacent reflector in the segment of the array.

Examples of Conspicuity Treatment

Trailers –

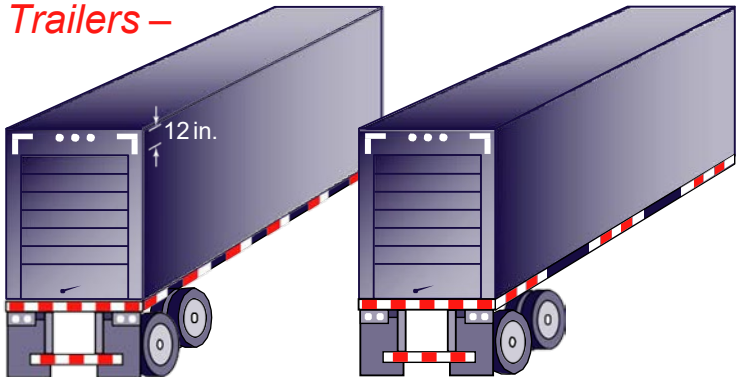

Flatbeds –

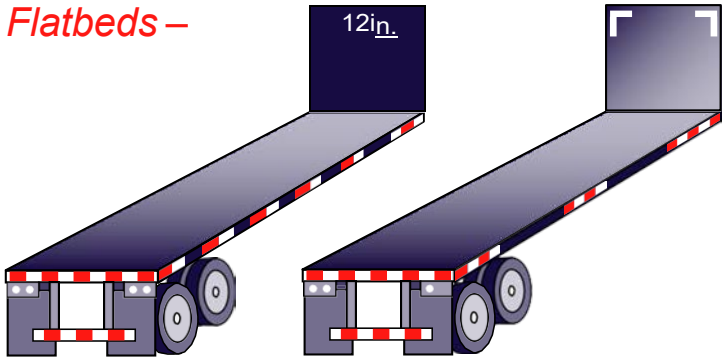

Tankers –

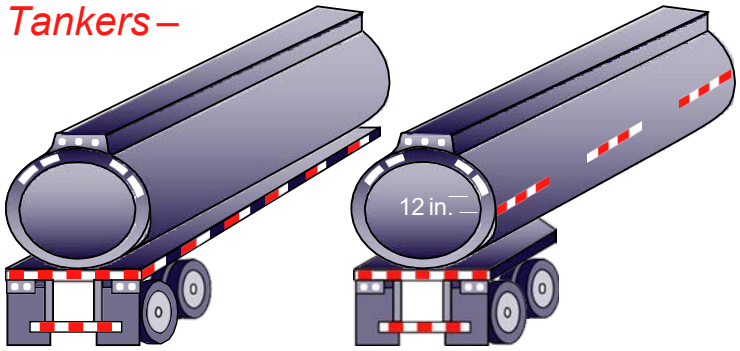

Tractors –

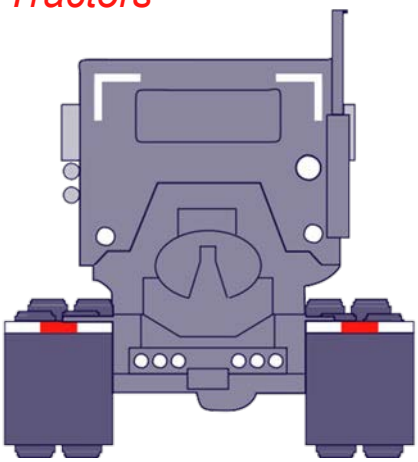

Illustrations courtesy of
3M Commercial Graphics Division.

CHAPTER SIX
COMMERCIAL MOTOR VEHICLES
CHAPTER CONTENT

INSPECTION ITEMS FOR COMMERCIAL MOTOR VEHICLES 06.00.00

EXCEPTIONS TO THE CMV INSPECTION REQUIREMENTS 06.05.00

COMMERCIAL VEHICLE INSPECTION ITEMS 06.10.00

CMV INSPECTION PROCEDURES 06.15.00

- Backup Lamps 15.1
- Beam Indicator 15.2
- Brake System 15.3
- Clearance Lamps 15.4
- Coupling Devices 15.5
- Exhaust System 15.6
- Frames 15.7
- Fuel System 15.8
- Hazard Warning Lamps 15.9
- Head Lamps 15.10
- Horn 15.11
- Identification Lamps 15.12
- License Plate Lamp 15.13
- Mirrors 15.14
- Reflective Sheeting/Reflex Reflectors – Conspicuity System 15.15
- Reflectors (Rear/Side) 15.16
- Safety Guards or Flaps 15.17
- Seat Belts 15.18
- Side Marker Lamps 15.19
- Steering Mechanism 15.20
- Stop Lamps 15.21
- Suspension 15.22
- Tail Lamps 15.23
- Tires 15.24
- Turn Signal Lamps 15.25
- Vehicle Identification Number (VIN) 15.26
- Wheels and Rims 15.27
- Window Tinting or Coating 15.28
- Windshield 15.29
- Windshield Wipers 15.30

EXAMPLES OF DEFECTIVE EQUIPMENT ON COMMERCIAL VEHICLES 06.20.00

CHAPTER SIX
COMMERCIAL MOTOR VEHICLES

06.00.00 INSPECTION OF COMMERCIAL MOTORVEHICLES-APPLICABILITY

1. The term "commercial motor vehicle" means a self- propelled or towed vehicle, other than a farm vehicle with a gross weight, registered weight, or gross weight rating under 48,000 pounds, that is used on a public highway to transport passengers or cargo if:

a. The vehicle, including a school activity bus as defined in Texas Transportation Code (TRC) Section 541.201, or combination of vehicles has a gross weight, registered weight, or gross weight rating of more than 26,000 pounds; or

b. The vehicle, including a school activity bus as defined by TRC 541.201, is designed to transport more than 15 passengers, including the driver; or

c. The vehicle is used to transport hazardous materials in a quantity requiring placarding by a regulation issued under the Hazardous Materials Transportation Act (49 U.S.C. Section 5101 et seq.). Additionally, if an automobile or motorcycle is transporting a hazardous material that requires placarding; these types of vehicles would also be required to have a commercial vehicle inspection.

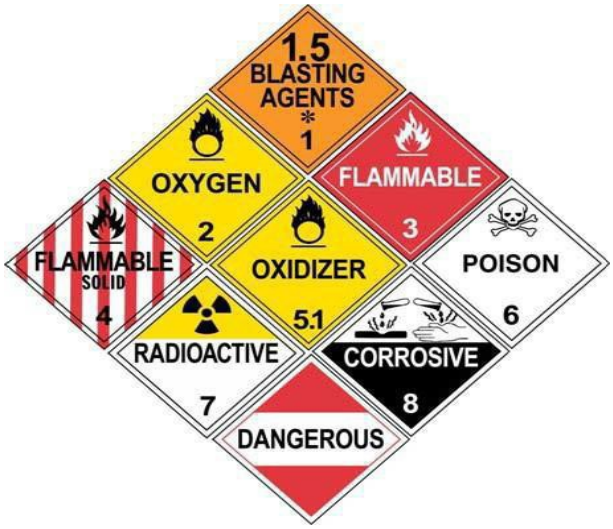

Examples of Hazardous Material Placards

2. The Commercial Motor Vehicle (CMV) Inspection Program also applies to any:

a. school bus that will operate at a speed of 60 mph outside of an urban district as authorized by TRC 545.352(b)(4)(A).

b. vehicle or combination of vehicles with a gross weight rating of more than 10,000 pounds that is operated in interstate commerce and registered in this state.

3. A commercial motor vehicle that is registered in this state shall be required to pass an annual inspection of all safety equipment required by the Federal Motor Carrier Safety Regulations.

4. A commercial motor vehicle required to be inspected under the Federal Motor Carrier Safety Regulations (FMCSR) is also subject to the regular state inspection requirements set forth in Chapter 4 of the Vehicle Inspection Operations & Training Procedures. The statutory fee may be charged for each commercial inspection. A signed vehicle inspection report will be issued for each passing CMV which will designate the vehicle has met both the FMCSR and state inspection requirements.

06.05.00 EXCEPTIONS TO THE CMV INSPECTION REQUIREMENTS

1. All school bus operations used to transport only children and/or school personnel from home to school and school to home (contract school buses are not exempt if used for any purpose other than transporting children to and from school).

2. Transportation performed by the Federal Government, State, or any political subdivision of a State, or an agency established under a compact between States that has been approved by the Congress of the United States.

3. The occasional transportation of personal property by individuals not for compensation or in the furtherance of a commercial enterprise.

4. Transportation of human corpses or sick or injured persons.

5. The operation of fire trucks and rescue vehicles while involved in emergency and related operations.

6. The operation of a commercial motor vehicle designed or used to transport between 9 and 15 passengers (including the driver), not for direct compensation, provided the vehicle does not otherwise meet the definition of a commercial motor vehicle.

7. The operation of a commercial motor vehicle designed or used to transport between 9 and 15 passengers (including the driver) for direct compensation, provided the vehicle does not otherwise meet the definition of a commercial vehicle.

8. The following farm vehicles when displaying farm license plates, or when in possession of a State issued Covered Farm Vehicle designation, not transporting hazardous materials requiring placarding, and not operating as a for-hire motor carrier:

a. Covered farm vehicles as defined in 49 CFR 390.5. {37 TAC 4.36(g)(7)}.

9. Even if the vehicle is not required to have a CMV Inspection, the vehicle may have to comply with the state inspection requirements set forth in Chapters 4 and 5.

06.10.00 COMMERCIAL VEHICLE INSPECTIONITEMS

A. Check for evidence of financial responsibility. A commercial motor vehicle defined in 06.00.00(1)(a), (b), and (c) is not required to display the standard proof of liability insurance form. The primary method for a commercial motor vehicle to show proof of financial responsibility is found in Annex #1 – Item #8 via cab card or certificate. (Refer to Annex #1).

A commercial motor vehicle not required to register with the Texas Department of Motor Vehicles under Texas Transportation Code, Chapter 643, may display the standard proof of liability insurance form.

B. Licensed dealers of Compressed Natural Gas (CNG), Liquefied Natural Gas (LNG), and Liquefied Petroleum Gas (LPG) are required to collect the per gallon tax when the fuel is sold or delivered into a motor vehicle's fuel supply tank. Vehicles that operate using CNG, LNG, or LPG will no longer prepay the CNG, LNG, or LPG tax by purchasing a decal from the Texas Comptroller's Office. Therefore, a valid liquefied gas tax decal is no longer required to be present before an inspection can be conducted on CNG, LNG, or LPG fueled vehicles.

C. Compressed Natural Gas (CNG) Fuel System

As a pre-requisite to issuing a passing vehicle inspection report, the inspector must verify that a motor vehicle equipped with a CNG Fuel System complies with the requirements of 49 CFR 571.304 and that the expiration date of the fuel container tank has not been exceeded. The inspector can complete this inspection requirement through observation and/or documentation.

The CNG Fuel System inspection should be made immediately after checking for proof of financial responsibility with the owner or operator of the vehicle present.

Observation – Check the label on the CNG fuel container

The CNG fuel container will be located in various places on a CMV. The CNG fuel container is often located in the same position where the standard fuel tanks would be placed. Additionally, the CNG fuel container may be located under the vehicle frame or behind the vehicle cab. On buses, the CNG fuel container is often located under the passenger compartment or on the roof of the passenger compartment.

The CNG fuel container label will be located on the CNG fuel tank.

Luxfer Gas Cylinders

CNG ONLY

Luxfer Gas Cylinders

Luxfer Part Number: A2085C-001
Serial Number: ADJ 12345
Service Pressure: 24820 kPa (3600 psig) at 21°C (70°F)
Date of Manufacture: 7 2007
DO NOT USE AFTER: 07/2027
Capacity: 200 Liters
Empty Weight: 170 lb.
DOT FMVSS 304 / NGV2-00 / TYPE 3
FOR USE ONLY WITH THE CONTAINER MANUFACTURER'S APPROVED PRD AND VALVES.

WARNING: Improper handling, use, filling, storage or disposal of this container may result in personal injury, death and/or property damage!

WARNING: Do not puncture or drop container. Do not modify container in any way. Never expose container to temperature exceeding 180°F (82°C).

WARNING: This container must be visually inspected after a motor vehicle accident or fire and at least every 36 months or 36,000 miles, whichever comes first for damage and deterioration. For visual inspection after a motor vehicle accident or fire, contact Luxfer Gas Cylinders at (800) 764-0366.

If there is a question about proper use, installation, or maintenance of this container contact Luxfer Gas Cylinders, 3016 Kansas Ave., Riverside, CA 92507; call (800) 764-0366 or fax (951) 781-6598.

Cylinder must be removed from service after the expiration date printed on the standard label.

The inspector should review the label information to determine what the expiration date of the CNG fuel container tank is and if the fuel container tank was manufactured in compliance with 49 CFR 571.304. The expiration date will be shown on the label. The label will also contain "DOT 49 CFR 571.304", DOT FMVSS 304", or a similar statement or marking that indicates that the tank was manufactured in accordance with 49 CFR571.304.

If the CNG fuel tank container label is not readily visible, an alternative location to check for compliance with 49 CFR 571.304 and for the expiration date on the CNG fuel container is on the fuel receptacle lid.

A label will normally be placed on the fuel receptacle lid and will contain both the expiration date for the CNG fuel tank container and information that confirms that the fuel tank container was manufactured in accordance with 49 CFR 571.304. An additional location to check for the CNG fuel tank container expiration date and for compliance with 49 CFR is on a label that may be found in the engine compartment. On certain vehicles, CNG labels may also be affixed to either the driver or passenger door frame or in the glove box area.

Documentation – The vehicle owner or operator may provide documentation from the original equipment manufacturer of the CNG fuel tank container or from a CNG installer or inspector, certified by the Texas Railroad Commission, that the expiration date of the CNG fuel tank container is not expired and the fuel tank container was manufactured in accordance with 49 CFR 571.304. In this situation, the inspector need not visually observe the labels as described above, however, the inspector must retain a copy of the documentation provided in the Vehicle Inspection Station's files for a period of one year from the date of the inspection.

The vehicle owner or operator may provide documentation that the vehicle is a fleet vehicle and that the fleet operator employs an installer or inspector, certified by the Texas Railroad Commission, for CNG Fuel Systems. In this situation, the inspector need not visually observe the labels as described above, however, the inspector must retain a copy of the documentation provided in the Vehicle Inspection Station's files for a period of one year from the month of the inspection.

The following is an **example** of the type of information a fleet operator should provide:

October 30, 2015

To Whom It May Concern:

This statement is furnished to comply with the requirements of 37 Texas Administrative Code (TAC) 23.41(e), relating to the inspection of a vehicle equipped with a compressed natural gas (CNG) fuel system. Pursuant to 37 TAC 23.41(e), I hereby certify that this vehicle equipped with a CNG fuel system is a fleet vehicle owned by the Railroad Commission of Texas for which the Railroad Commission of Texas employs a certified installer or inspector of CNG fuel systems as defined in 37 TAC 23.41(g).

CNG Inspection Procedure:

1. Determine by observation if the CNG Fuel Tank Container exceeds the expiration date shown on the container's label or other CNG Fuel System labels attached to the vehicle and if the CNG Fuel Tank Container was manufactured in accordance with 49 CFR 571.304; or

2. Review documentation, provided by the vehicle owner or operator, from the original equipment manufacturer of the CNG Fuel Tank Container or from a Texas Railroad Commission certified CNG installer or inspector that the expiration date of the CNG fuel tank container is not expired and the CNG Fuel Tank Container was manufactured in accordance with 49 CFR 571.304 (retain copy of documentation provided for 1 year in VI Station's files); or

3. If the owner or operator states that the vehicle to be inspected is a fleet vehicle, review documentation provided by the owner or operator that the fleet operator employs a Texas Railroad Commission certified installer or inspector for CNG Fuel Systems (retain copy of documentation provided for 1 year in VI Station's files).

Reject Vehicle if:

1. The CNG Fuel Tank Container was not manufactured in accordance with 49 CFR 571.304.

2. The CNG Fuel Tank Container has exceeded its expiration date.

3. Compliance with 49 CFR 571.304 cannot be determined through observation or documentation.

4. The expiration date of the CNG Fuel Tank Container cannot be determined through observation or documentation.

5. If a fleet operator does not provide documentation that the fleet operator employs a certified installer or inspector for CNG Fuel Systems, unless compliance can be determined by reviewing the CNG labels affixed to the vehicle or from documentation provided by the original equipment manufacturer or from a certified CNG installer or inspector.

A Failing Vehicle Inspection Report is not required to be completed for a vehicle powered by a CNG Fuel System that fails the CNG inspection criteria as this determination should be made immediately after verifying that the vehicle is covered by valid insurance or other financial responsibility documents. If the CNG Fuel System does not pass the inspection, the inspection process shall not proceed any further. The inspector should advise the owner or operator of the vehicle the reason why the CNG Fuel System is failing the inspection.

D. The following is a list of items to be inspected in order to be in compliance with the FMCSR annual inspection.

1. Backup Lamp
2. Beam Indicator
3. Brake System
4. Clearance Lamps
5. Coupling Devices
6. Exhaust System
7. Frames
8. Fuel System
9. Hazard Warning Lamps
10. Head Lamps
11. Horn
12. Identification Lamps
13. License Plate Lamp
14. Mirrors
15. Reflective Sheeting/Reflex Reflectors-Conspicuity System
16. Reflectors(Rear/Side)
17. Safety Guards or Flaps
18. Seat Belts
19. Side Marker Lamps
20. Steering Mechanism

21. Stop Lamps
22. Suspension
23. Tail Lamps
24. Tires
25. Turn Signal lamps
26. Vehicle Identification Number (VIN)
27. Wheels and Rims
28. Window Tinting or Coating
29. Windshield
30. Windshield Wipers

06.15.00 CMVINSPECTION PROCEDURES

A crack in a required lamp is defined as any break, separation, or missing part that permits light from the bulb to emit through the crack or break.

15.1 Backup Lamps

1. Inspect for and reject if (Refer to Annex #3 for lighting diagrams):

a. At least one steady burning lamp not present on bus, truck, or truck tractor.

b. Not securely mounted or properly located.

c. Lamp does not emit proper color (white); lens or bulb painted; or repaired with repair tape or repair kit.

d. Lens cracked, broken, discolored, missing, or a portion of the lens is missing.

e. Wiring insulation is worn, rubbed bare, or evidence of burning, short circuiting, or poor connection.

f. Lamp is not clearly visible in normal sunlight. LED lights have less than 50% of diodes illuminated.

g. Lamp not activated properly when bus, truck, or truck tractor is in reverse.

h. Lamp assembly is cracked allowing water to enter into the lamp assembly or the lamp assembly contains standing water.

15.2 Beam Indicator

Every new motor vehicle registered in Texas after January 1, 1948, other than a motorcycle or a motor-driven cycle, which has multiple beam road lighting equipment, shall be equipped with a beam indicator (no certain color required) which shall be lighted whenever the uppermost distribution of light from the head lamp is in use, and shall not be otherwise lighted. Said indicator shall be so designed and located that when lighted it will be readily visible without glare to the driver of the vehicle so equipped.

1. Inspection Procedure. Check operation and condition visually.

2. Inspect for and reject if: (When required)

a. Vehicle not equipped with a beam indicator.

b. Improper switching indication.

c. Produces glaring light.

d. Inoperative for any reason.

15.3 Brake System

Definitions:

1. Brake System: A combination of one or more brakes and their related means of operation and control.

2. Service Brake System: A brake system used for retarding, stopping, and controlling the vehicle under normal operating conditions. This brake is sometimes referred to as the “foot brake.”

3. Parking Brake System: A brake system used to hold and maintain the vehicle in a stationary position. A positive mechanical means is employed to hold the brake applied when the vehicle is unattended.

4. Pedal Reserve: As applied to hydraulic, mechanical, or power assisted hydraulic brakes, this is the amount of distance (total pedal travel) left in reserve when the pedal is depressed to the brake-applied position. The purpose of the pedal reserve check is to ascertain the degree of the brake adjustment and to demonstrate satisfactory brake actuating system condition.

5. Equalization: Brakes shall be so adjusted as to operate as equally as practicable with respect to the wheels on the opposite sides of the vehicle.

6. Driveaway-Towaway Operation: Any operation in which any motor vehicle, trailer, or semitrailer, singly or in combination, new or used, constitutes the commodity being transported when one set or more of wheels of any such vehicle are on the roadway during the course of the transportation, whether or not any such vehicle furnishes the motor power.

Every commercial motor vehicle shall be equipped with brakes acting on all wheels, except trucks and truck-tractors having three or more axles and manufactured without brakes on the front wheels before July 25, 1980.

Any vehicle being towed in a driveaway towaway operation, provided the combination of vehicles is capable of complying with the brake performance requirements, does not require brakes acting on all wheels. House moving dollies that are required to be inspected under the commercial vehicle inspection program are exempt from the braking requirements under the FMCSR and under the special mobile equipment sections of state law. Converter dollies are not exempt from the braking requirements under the FMCSR and special mobile equipment sections of state law.

The service brake test on commercial motor vehicles will be conducted using one of the following methods:

1. On Road (Decelerometer);

2. On Road (Brake Test Area);

3. Platform-Type Tester; or

4. Roller-Type Tester (Dynamometer-Force Measuring Type).

Service Brake Tests

5. On Road (Decelerometer): Mount an approved Decelerometer at centerline of the vehicle. Level the Decelerometer. At a speed of 20 mph apply service brake firmly. Observe Decelerometer reading.

A. Decelerometer Test Procedures:

(1) This tester is an inertia-type Decelerometer consisting of a scale to measure the vehicle's deceleration or equivalent braking force (sometimes referred to as brake efficiency) in percentages. The Decelerometer is generally placed as close to the center of the vehicle as practicable (on window of right front door) and the vehicle is operated on the roadway outside the inspection station.

(2) Operation:

a. Level Decelerometer and set to "0."

b. Drive vehicle on a clean, level road (road grade of 5% or less) at 20 mph and apply brakes evenly, without skidding vehicle wheels.

c. Read the dial to see if vehicle stopped within required stopping distance for class of vehicle.

d. For brake balance (equalization), the vehicle should stop in a straight line. A pull to side, right or left, during a test stop indicates brake unbalance.

6. Conditions affecting brake tester readings:

a. Wet tires and roadways may cause readings of braking efficiency to be inaccurate.

b. Oil slicks, sand, or other foreign material on tires or roadways may also cause readings of braking efficiency to be inaccurate.

c. Worn or slick tires may also cause readings to be inaccurate.

d. Any fast, hard application of the brake can cause wheel lockup and tire skid.

2. On Road (Road Test): At a speed of 20 mph apply service brakes firmly. Observe whether a vehicle comes to a smooth stop within the distance prescribed by the chart, "Brake Stopping Distance."

The inspector should have firm control of the steering wheel throughout the test. If a Brake Test Area is used, all vehicles being inspected should be driven at a speed of 20 mph and the vehicle must stop as indicated by the Stopping Distance Chart in Annex #2.

A. If a road test is used for checking service brakes:

(1) Brake test area must be used on every inspection made.

(2) When it is raining, snowing, or when the brake surfaces are wet, brake tests are permitted; however, if the certified inspector feels that they cannot safely and with due care accurately check the service brakes, inspector may refuse to perform the inspection.

(3) No inspections are permitted when the brake test areas are icy.

(4) Extreme care must be exercised and sudden stops must be avoided if other traffic is affected.

(5) The brake p e d a l application must be applied when the vehicle speed reaches 20 miles per hour. The stopping distance is to be measured from the point at which the service brake pedal or control begins. The vehicle must stop within the prescribed stopping distance requirements and must not pull to the right or left. Using the service (foot) brake only, the stopping ability of the vehicle should be tested by actual operation of the vehicle.

(6) When applying brakes to the moving vehicle, the braking force must be evenly distributed to the wheels. The brakes should be so adjusted as to operate as equally as practicable with respect to the wheels on the opposite sides of the vehicle. The driver should have a firm control of the steering wheel throughout the test.

(7) Brakes on a truck-tractor may be inspected without a trailer; however, a trailer shall be inspected only with a towing vehicle attached.

3. Platform Tester: Drive vehicle onto "drive-on-and- stop" platform tester consisting of 4 pads or platforms, one for each wheel. Apply brakes firmly at a speed from 4-8 mph without wheel lockup. All braking action must take place on the platforms. Front-wheel drive vehicles are to be checked by road test only unless a platform tester specifically approved by the Department to test front-wheel drive vehicles is used. These machines may be used to inspect the relative effectiveness of each wheel. When the brakes are applied at the time the vehicle is moving on the pads, the braking effort at each wheel causes a proportionate movement of the pad against the measuring system. There should be braking action on all wheels and the action on any one wheel should be 75 percent or more of the action on the other wheel on the same axle.

A. Platform Test Procedures:

(1) Drive vehicle on brake tester about 5 miles per hour and apply the brakes firmly but not severely. (Excessive speed and braking should be avoided).

(2) These machines may be used to inspect the relative effectiveness of each wheel. There should be braking action on all wheels, unless otherwise exempt.

(3) Each gauge will record the individual wheel braking effort in hundreds of pounds.

(4) Total braking effort and comparative braking energy can be determined.

(5) The tester must be properly installed, maintained, and kept clean at all times.

(6) If the vehicle fails the first brake test, a second brake test must be conducted before the vehicle is rejected.

B. Equalization and Tolerances:

(1) Total reading must not be less than 50% of the total weight of the vehicle if the vehicle has brakes on all wheels. The required 50% is the equivalent of a vehicle stopping within 25 feet at 20 miles per hour.

(2) Total reading must not be less than 35% of the weight of the vehicle if the vehicle does not have brakes on all wheels. The required 35% is the equivalent of a vehicle stopping within 39 feet at 20 miles per hour.

(3) Brake machine readings on each opposing wheel of the same axle shall be within 25% on the front axle and within 35% on the rear axle.

C. Conditions affecting Platform Tester readings:

(1) Wet tires or wet tread plates (pads) will cause readings of braking efficiency to be inaccurate.

(2) Grease, sand, or other foreign material on tires or tread plates (pads) will also cause readings of braking efficiency to be inaccurate.

(3) Worn or slick tires will not affect brake tester as much as they will affect a road test.

(4) Dirt and debris under the tread plates (pads).

4. Roller-Type Brake Dynamometer-Force

(3) Heavy compacts 3,100 to 3,600 pounds - 285 lb Brake Effort/Wheel (Total 570 pounds)

(4) All others over 3,700 pounds - 335 lb Brake Effort/Wheel (Total 670 pounds)

(5) Brake Balance Test - During the "Brake Force Test," variance in braking force between wheels should not exceed 70 pounds.

(E) As an additional service to the vehicle owner or operator, the inspection station is permitted to perform an additional dynamic brake inspection according to recommendations of the equipment manufacturer. However, rejection must be based on the above parameters under "Operation - Acceptance Tests."

(F) If substandard brake conditions are found that are not exposed by the above acceptance test, the inspection station may suggest that brake repairs be made but must clearly inform the vehicle owner or operator that such repairs are not mandatory to pass inspection.

Measuring Type): This type brake tester is equipped with powered rollers that rotate the wheels at a speed of approximately 35 to 45 miles per hour with the vehicle in a stationary position. The brakes are applied while the wheels are turning. Measurements of both **BRAKING FORCE** (Brake Effort) and **BRAKE BALANCE** are indicated on the gauge(s). Brake fade can also be tested on this machine.

(A) Adjust tire inflation to recommended values.

(B) Position vehicle on dynamometer rolls and begin test.

(C) Follow Department's recommended testing procedures as follows.

(D) Operation - Acceptance Tests. With tester in operation and wheels turning, apply brakes slowly until brake effort reaches the following values and hold for 5-6 seconds:

(1) Small vehicle up to 2,200 pounds - 175 lb Brake Effort/Wheel (Total 350 pounds)

(2) Light compacts 2,300 to 3,000 pounds - 230 lb Brake Effort/Wheel (Total 460 pounds)

5. Test Brake Hydraulic System for Leakage

While the vehicle is stopped, the inspector should be able to apply a moderate foot force (40 – 60 pounds in non-power assisted systems or 15 – 20 pounds in power assisted systems).

6. Test Pedal Reserve

While the vehicle is stopped, the inspector should depress the brake pedal under moderate foot force (40 – 60 pounds in non-power assisted systems or 15 – 20 pounds in power assisted systems).

7. Check Condition of Vacuum System

(A) Inspection Procedures:

(1) Visually inspect the vacuum system for collapsed, broken, badly chafed, and improperly supported hoses and tubes. Check for loose or broken hose clamps.

(2) When checking the operation of the vacuum system on a truck or truck-tractor, the trailer shutoff valves must be closed. When checking the operation of the vacuum system on a trailer or semitrailer, the trailer must be coupled to a truck or a truck-tractor with the trailer shutoff valve open. The engine of the truck-tractor should be allowed to run for one minute to build up vacuum.

(3) Visually inspect system for collapsed, broken, badly chafed, and improperly supported hoses and tubes, and loose or broken hose clamps.

(4) On truck or truck-tractor, depress brake pedal with moderate foot force. While maintaining this force on the pedal, start engine, and observe if pedal falls slightly when engine starts.

(5) On trucks with low vacuum indicators build full vacuum. Shut off engine and reduce vacuum by making a series of moderate brake applications. A flashing or buzzing signal shall function when vacuum reaches eight inches mercury.

(6) Apply and release pedal a number of times and observe action on brake chamber rod on trailers.

c. Inspect for and reject if:

a. Brake System does not meet the requirements for stopping distance for the class of vehicle; the service brakes do not develop the required total braking force as determined by machine tests; or the service brakes are not equalized as determined from road or machine testing of the vehicle.

b. Absence of braking action, on any axle required to have brakes, upon application of the service brakes (such as missing brakes or brake shoe(s) failing to move upon application of a wedge, S-cam, cam, or disc brake).

c. Missing or broken mechanical components including: shoes, linings, pads, springs, anchor pins, spiders, cam rollers, push rods, and air chamber mounting bolts.

See the Brake System Diagrams to Assist with Identifying the Component Parts of CMV Brake Systems:

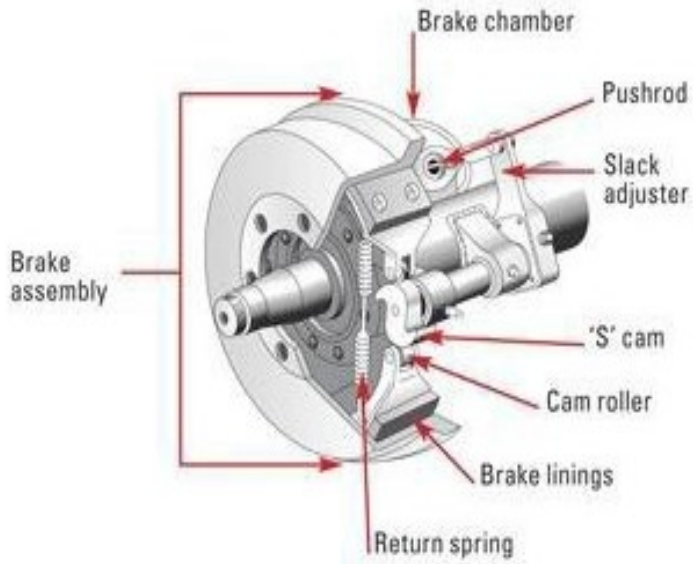

THE "S" CAM BRAKE

Uses an "S" shaped cam to expand the brake shoes against the drum.

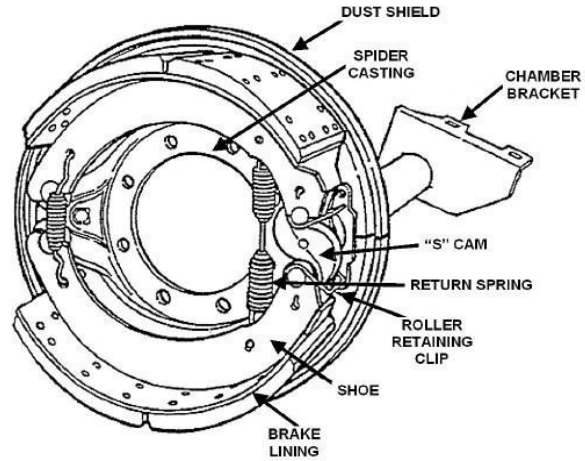

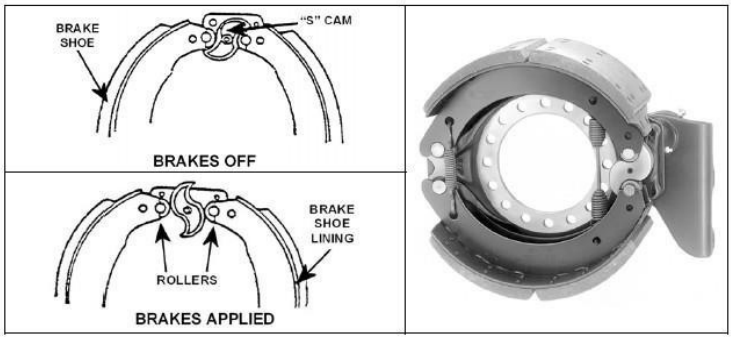

THE DISC BRAKE

Uses two (2) brake pads pinched against a rotating disc or rotor.

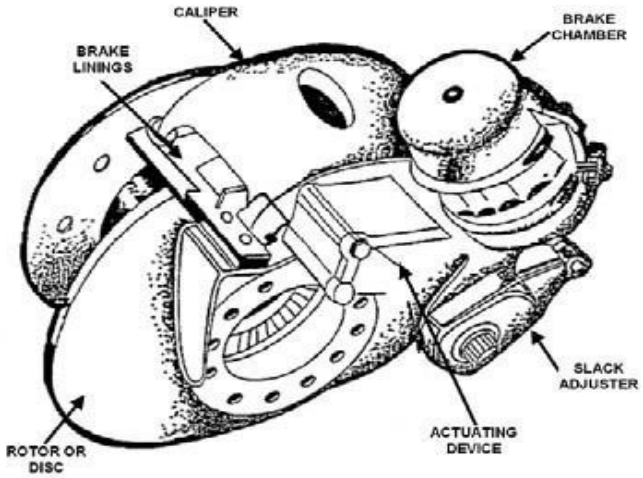

DISC BRAKE, SIDE VIEW
(This particular disc is from a hydraulic system.)

EXAMPLE DISC BRAKE
(This particular disc is from an air system.)

THE WEDGE BRAKE

Uses a wedge forced between two (2) brake shoes to expand the shoes against the drum.

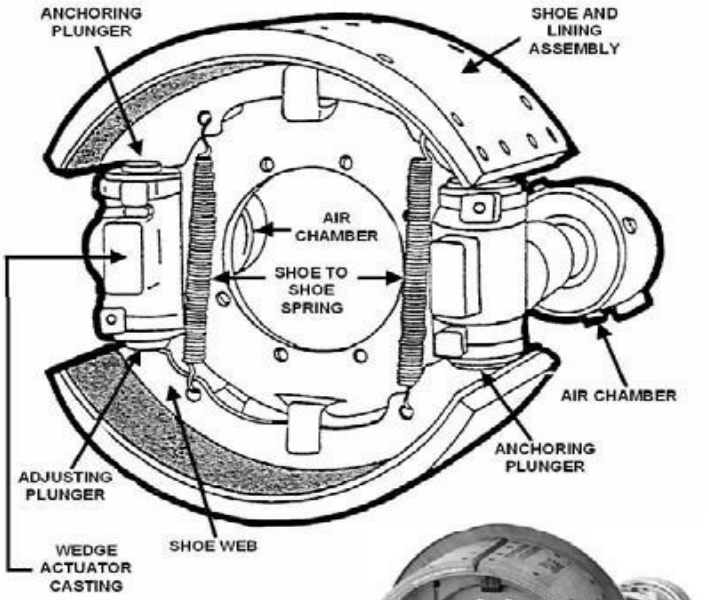

d. Loose brake components including air chambers, spiders, and cam shaft support brackets.

e. Audible air leak at brake chamber (e.g., ruptured diaphragm, loose chamber clamp, etc.).

f. Readjustment limits. Any brake beyond the readjustment limit shall be cause for rejection. Stroke shall be measured with the engine off and an air pressure reservoir of 80 to 90 psi. (Refer to Annex #2 for readjustment limits)

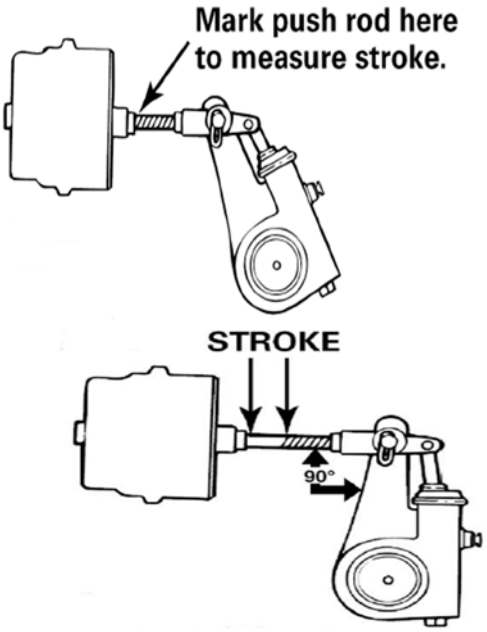

g. Brake linings or pads:

1) Lining or pad is not firmly attached to the shoe.

2) Saturated with oil, grease, or brake fluid.

3) Non-steering axles: Lining with a thickness less than ¼ inch at the shoe center for air drum brakes, 1/16 inch or less at the shoe center for hydraulic disc and electric drum brakes, and less than 1/8 inch for air disc brakes.

4) Steering axles: Lining with a thickness less than ¼ inch at the shoe center for air drum brakes, 1/16 inch or less for hydraulic disc and electric drum brakes, and less than 1/8 inch for air disc brakes.

h. Missing brake on an axle required to have brakes.

i. Mismatch across any power unit steering axle of:

1) Air chamber sizes.

2) Slack adjuster length.

j. Parking Brake System - The parking brake system shall be adequate to hold the vehicle or combination on any grade upon which it is operated under any condition of loading, on a surface free from ice and snow. The parking brake system shall be capable of being applied by the driver's muscular effort or by spring action. The parking brake system may be assisted by the service brakes or other source of power, provided that failure of the service brakes or other power assisting mechanisms will not prevent the parking brake system from being applied. The parking brake system shall be so designed that when applied, it shall remain in the applied position despite exhaustion of any source of energy or leakage of any kind. If the means of applying the parking brake and the service brake are connected in any way, they shall be so constructed that failure of any one part shall not leave the
vehicle without operative brakes. Brake lock systems will not meet the parking brake requirement (i.e. placing the transmission in park).

1. Inspection Procedure. Apply only the parking brake system. Verify that brakes are applied on the vehicle or combination upon actuation of the parking brake control.

2. Inspect Parking Brake for and reject if:

a. Vehicle is not equipped with a parking brake.

b. Operating mechanism, when fully applied, does not hold the brakes in applied position without manual effort.

c. Actuating mechanism is not fully released when the release control is operated.

d. Any mechanical parts are missing, broken, badly worn, or not operating properly.

e. Pull cables are badly worn, stretched, frayed, or not operating freely.

f. Parking brake will not hold the vehicle in place when, with the engine running, the vehicle is placed in forward gear and the engine is accelerated enough to cause a pull on the braking mechanism.

k. Brake Drums or Rotors

Inspect Brake Drum or Rotors and reject if:

1) Any external crack or cracks that open upon brake application (do not confuse short hairline heat related cracks with flexural cracks).

2) Any portion of the drum or rotor is missing or in danger of falling away.

l. Brake Hose

Inspect Brake Hose and reject if:

1) Hose with any damage extending through the outer reinforcement ply. (Rubber impregnated fabric cover is not a reinforcement ply. Thermoplastic nylon may have braid reinforcement or color difference between cover and inner tube. Exposure of second color is cause for rejection).

2) Bulge or swelling when air pressure is applied.

3) Any audible leaks.

4) Two hoses improperly joined (such as a splice made by sliding the hose ends over a piece of tubing and clamping the hose to the tube).

5) Air hose cracked, broken, or crimped.

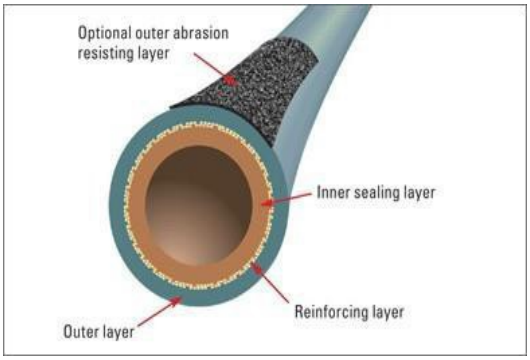

m. Brake Tubing

Inspect Brake Tubing and reject if:

1) Any audible leak.

2) Tubing cracked, damaged by heat, broken, or crimped.

n. Low Pressure Warning Device. Before March 1, 1975, vehicles may have either an audible or visible warning device. On or after March 1, 1975 vehicles must have a visible device and may also have an audible warning. Gauges alone are not acceptable as warning devices.

Inspect Low Pressure Warning Device and reject if:

1) Missing, inoperative, or does not operate at 55 psi and below, or 1/2 the governor cut-out pressure, whichever is less.

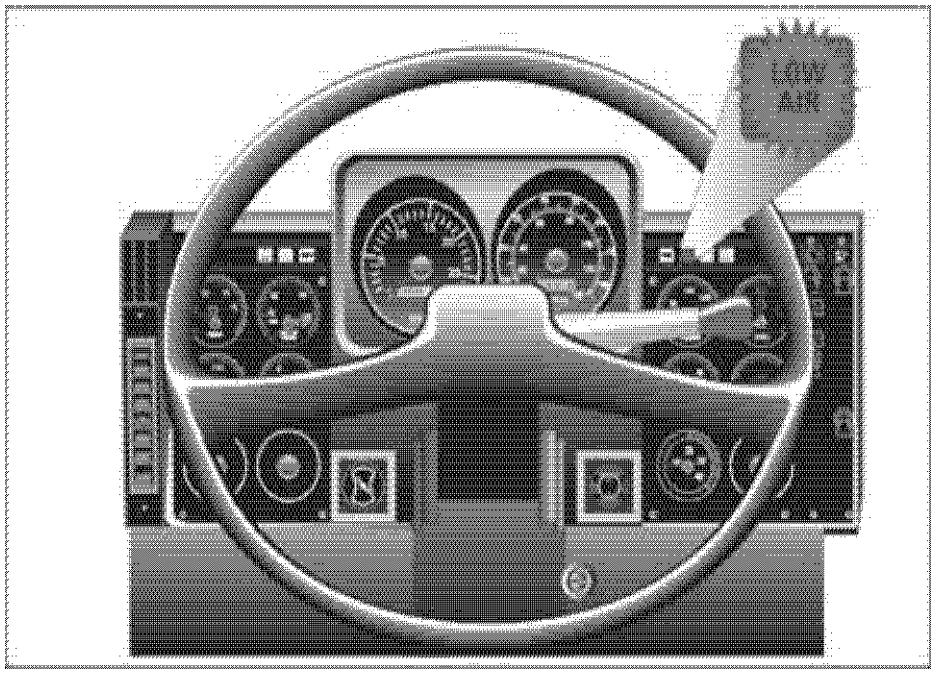
LOW
AIR

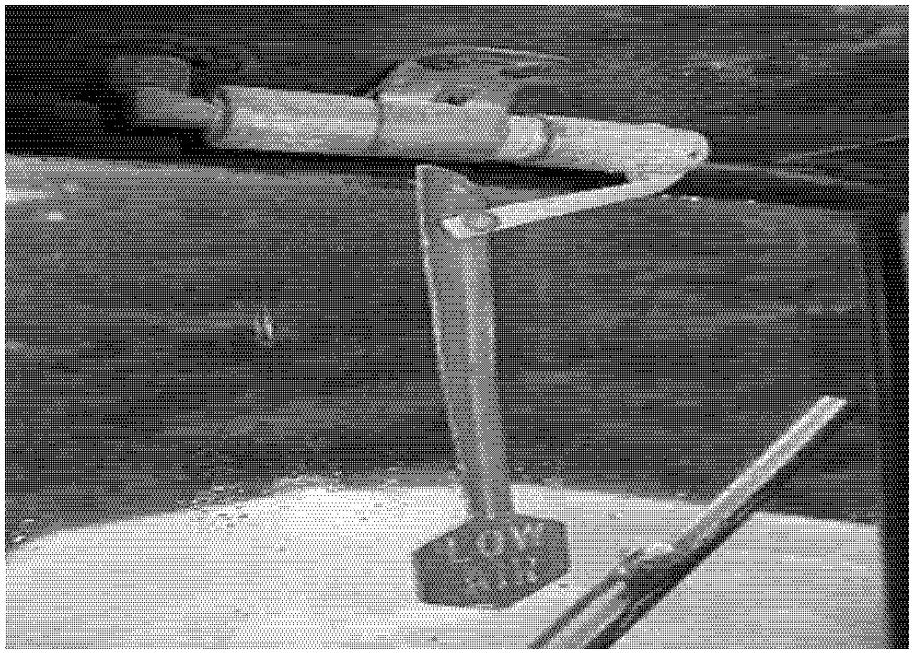

o. Tractor Protection Valve

Inspect Tractor Protection Valve and reject if:

1) Inoperable or missing tractor protection valve(s) on power unit.

p. Air Compressor/Air Reservoir System

Inspect Air Compressor/Air Reservoir System and reject if:

1) Compressor drive belts in condition of impending or probable failure.

2) Loose compressor mounting bolts.

3) Cracked, broken, or loose pulley.

4) Cracked or broken mounting brackets, braces, or adaptors.

5) Compressor air intake cleaner is clogged sufficiently to prevent the proper intake of air.

6) Time required building up air pressure from 50 to 90 psi takes more than 3 minutes with the engine running a fast idle.

7) Compressed air reservoir is insufficient to permit one full service brake application with the engine stopped, and with the system fully charged, without lowering the reservoir pressure more than 20% below the initial air pressure reading.

8) Governor cut-in pressure lower than 80 psi or cut-out pressure higher than 135 psi, unless other values are recommended by the vehicle manufacturer.

9) Air reservoir pressure drop of more than 2 psi in 1 minute for a single vehicle or more than 3 psi in 1 minute for vehicle combinations with the engine stopped and the service brake released.

10) Air reservoir pressure drop of more than 3 psi in 1 minute for a single vehicle or more than 4 psi in 1 minute for vehicle combinations with the engine stopped and the service brakes fully applied.

q. Electric Brakes

Inspect Electric Brakes and reject if:

1) Absences of braking action on any wheel required to have brakes.

2) Missing or inoperable breakaway braking device.

r. Hydraulic Brakes. (Including Power Assist Over Hydraulic and Engine Drive Hydraulic Booster)

Inspect Hydraulic Brakes and reject if:

1) Master cylinder less than ¼ full.

2) No pedal reserve with the engine running except by pumping pedal.

3) Power assist unit fails to operate.

4) Seeping or swelling brake hose(s) under application of pressure.

5) Missing or inoperative check valve.

6) Has any visually observed leaking hydraulic fluid in the brake system.

7) Has hydraulic hose(s) abraded (chafed) through the outer cover-to-fabric layer.

8) Fluid lines or connections leaking, restricted, crimped, cracked, or broken.

9) Brake failure or low fluid warning light on or inoperative.

s. Vacuum Systems

Inspect Vacuum Brakes and reject if:

1) Has insufficient vacuum reserve to permit one full brake application after the engine is shut off.

2) Has vacuum hose(s) or line(s) restricted, abraded (chafed) through outer cover to cord ply, crimped, cracked, broken, leaking or has collapse of vacuum hose(s) when vacuum is applied.

3) Lacks an operative low-vacuum warning device as required.

15.4 ClearanceLamps

Clearance lamps are required on all:

1) Buses 80 inches or more in overall width.
2) Trucks 80 inches or more in overall width.
3) Trailers and semitrailers 80 inches or more in overall width.
4) Trailers and semitrailers 30 feet or more in overall length.
5) Pole trailers.

Clearance lamps shall, so far as is practicable, be mounted on the permanent structure of the vehicle in such a manner as to indicate the extreme height and width of the vehicle. Mounting exceptions for clearance lamps are as follows:

1) On a truck tractor, clearance lamps mounted on the cab may be located to indicate the width of the cab, rather than the width of the vehicle.

2) On a trailer, the front clearance lamps may be mounted at a height below the extreme height if mounting at the extreme height results in the lamps failing to mark the overall width of the trailer.

3) When the rear identification lamps are mounted at the extreme height of a vehicle, rear clearance lamps are not required to be located as close as practicable to the top of the vehicle.

Clearance lamps and side marker lamps may be mounted in combinations, provided illumination is given as required by law.

Clearance lamps mounted on the front or on the sides near the front of a vehicle shall display an amber color.

Clearance lamps mounted on the rear or on the sides near the rear of a vehicle shall display a red color.

Clearance lamps shall be visible under normal atmospheric conditions at a distance between 500 feet and 50 feet from the vehicle on which mounted.

On buses and trucks 80 inches or more in overall width and trailers and semitrailers 80 inches or more in overall width:

1) On the front, two clearance lamps.

2) On the rear, two clearance lamps.

1. Inspection Procedures (Refer to Annex #3 for lighting diagrams):

a. Check operation and condition visually.

2. Inspect for and reject if:

a. Lamps are not present.

b. Lamps are not securely mounted, properly located, or repaired with repair tape or repair kit.

c. Lamps do not emit required color; lens or bulb painted; or not steady burning.

d. Visibility requirements are not met. LED lights have less than 50% of diodes illuminated.

e. Lens is discolored, missing, or a portion of the lens is missing.

f. Wiring insulation is worn, rubbed bare, or shows any evidence of burning, short circuiting, or poor electrical connections.

g. Lens is cracked.

h. Any lamp assembly is cracked allowing water to enter or the lamp assembly contains standing water.

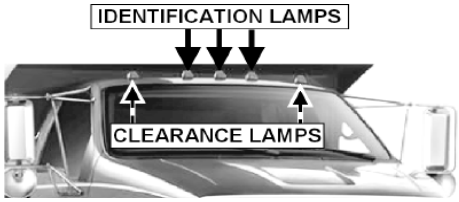

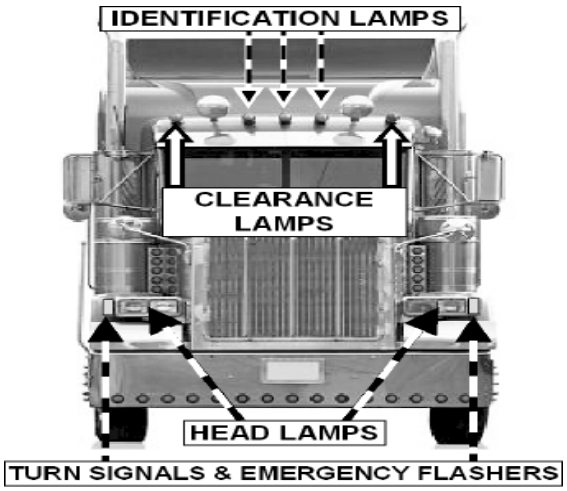

15.5 Coupling Devices

A. Inspect Fifth Wheel for and reject if:

1) Mounting to Frame:
   a. Any fasteners missing or ineffective.
   b. Any movement between mounting components.
   c. Any mounting angle iron cracked or broken.

2) Mounting Plates and Pivot Brackets:
   a. Any fasteners missing or ineffective.
   b. Any welds or parent metal cracked.
   c. More than 3/8 inch horizontal movement between pivot bracket pin and bracket.
   d. Pivot bracket pin missing or not secured.

3) Sliders:
   a. Any latching fasteners missing or ineffective.
   b. Any fore or aft stop missing or not securelyattached.
   c. Movement more than 3/8 inch between slider bracket and slider base.
   d. Any slider component cracked in parent metal or weld.

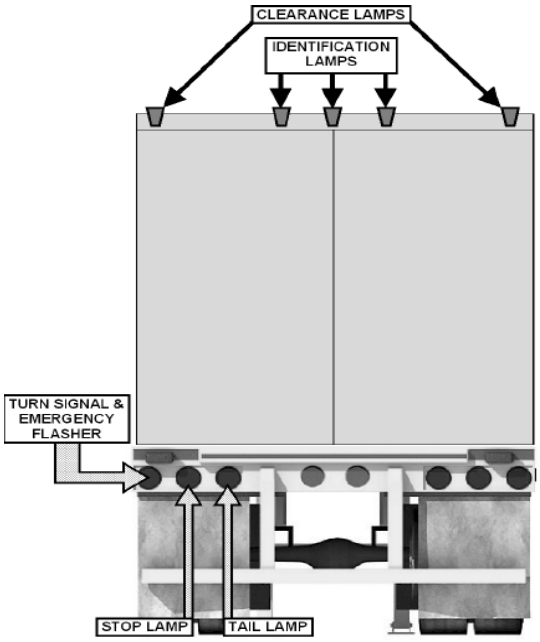

1) Lower Coupler:

a. Horizontal movement between the upper and lower fifth wheel halves exceeds ½ inch.

b. Operating handle not in closed or locked position.

c. Kingpin not properly engaged.

d. Separation between upper and lower coupler allowing light to show through from side to side.

e. Cracks in the fifth wheel plate. (Exceptions: Cracks in fifth wheel approach ramps and casting shrinkage cracks in the ribs of the body of a cast fifth wheel.)

f. Locking mechanism parts missing, broken, or deformed to the extent the kingpin is not securely held.

SLIDING FIFTH WHEEL

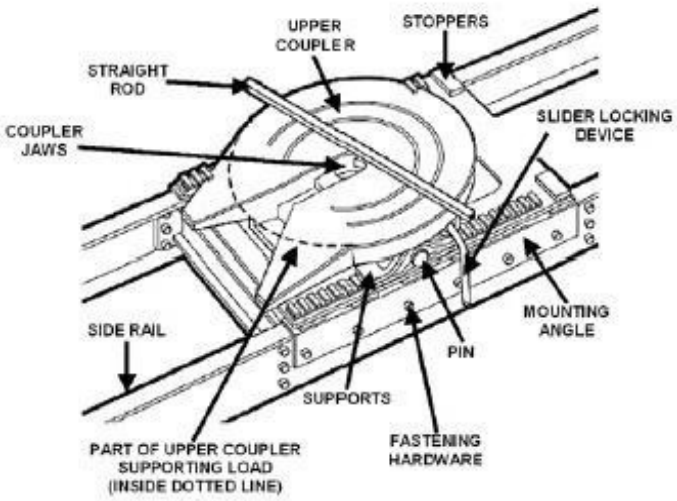

FIXED FIFTH WHEEL

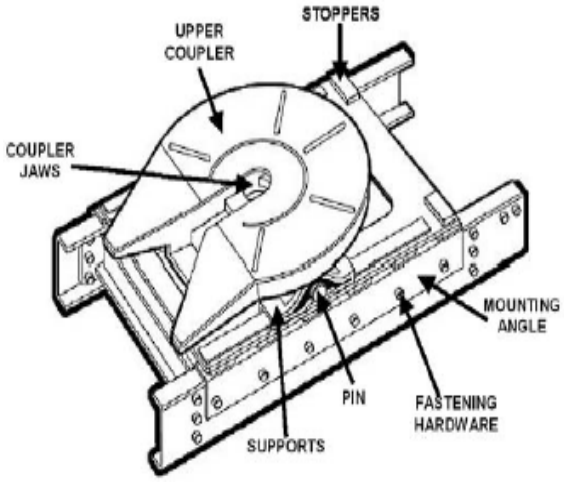

B. Inspect Pintle Hooks for and reject if:

1) Mounting to Frame:

a. Any missing or ineffective fasteners (a fastener is not considered missing if there is an empty hole in the device but no corresponding hole in the frame or vice versa).

b. Mounting surface cracks extending from point of attachment (e.g., cracks in the frame at mounting bolt holes).

c. Loose mounting or frame crossmember providing pintle hook attachment cracked.

2) Integrity:

a. Cracks anywhere in pintle hook assembly.

b. Any welded repairs to the pintle hook.

c. Any part of the horn section reduced by more than 20%.

d. Latch unsecure.

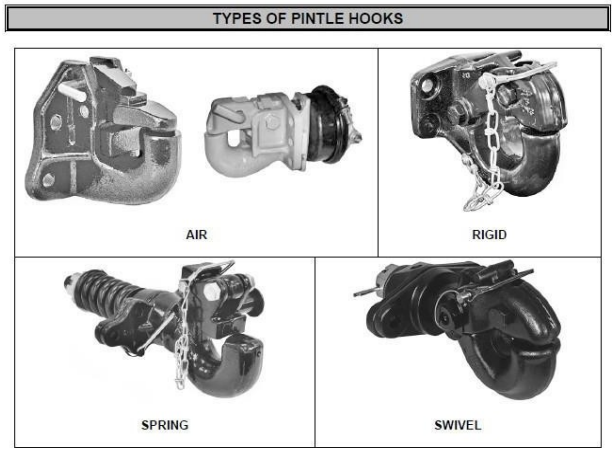

C. Inspect Drawbar/Towbar Eye for and reject if:

1) Mounting:

a. Any cracks in attachment welds.

b. Any missing or ineffective fasteners.

2) Integrity:

a. Anycracks.

b. Any part of the eye reduced by more than 20%.

D. Inspect Drawbar/Towbar Tongue for and reject if:

1) Slider (Power or Manual):

a. Ineffective latching mechanism.

b. Missing or ineffective stop.

c. Movement of more than ¼ inch between slider and housing.

d. Any leaking air or hydraulic cylinders, hoses, or chambers (other than slight oil weeping that is normal with hydraulic seals).

2) Integrity:

a. Anycracks.

b. Movement of ¼ inch between subframe and drawbar at point of attachment.

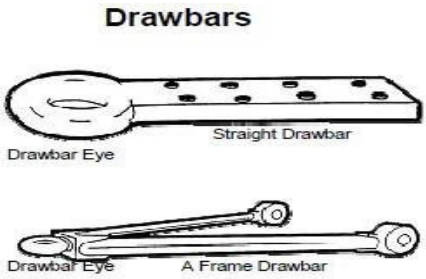

E. Inspect Safety Devices for and reject if:

a. Safetydevices missing.

b. Unattached or incapable of secure attachment.

c. Chains and hooks:

1) Worn to the extent of a measurable reduction in link cross section.

2) Improper repairs including welding, wire, small bolts, rope, and tape.

d. Cable:

1) Kinked or broken cable strands.

2) Improper clamps or clamping.

F. Inspect Saddle-Mounts for and reject if:

1) Method of Attachment:

a. Any missing or ineffective fasteners.

b. Loose mountings.

c. Any cracks or breaks in a stress or load-bearingmember.

d. Horizontal movement between upper and lower saddle-mount halves exceeds ¼ inch.

15.6 Exhaust System

A. Exhaust Emission System. The owner or operator of any new motor vehicle or new motor vehicle engine, beginning with model year 1968, equipped with an exhaust emission system shall maintain the exhaust emission system in good operable condition.

The owner or operator of the motor vehicle or motor vehicle engine shall not remove or intentionally make inoperable within the State of Texas the exhaust emission system or any part thereof, except where the purpose of removal of the exhaust emission system or part thereof is to install another exhaust emission system or part thereof, which is intended to be equally effective in reducing atmospheric emissions from the vehicle or engine.

The exhaust emission system was installed by manufacturers of motor vehicles beginning with model year 1968. The inspection of the exhaust emission system will apply only to those vehicles that are equipped with such a system. The following exhaust emission systems will be inspected if installed as original equipment by the manufacturer: thermostatic air cleaner (including flexible tubing), exhaust gas recirculation system, positive crankcase ventilation system, air injection system, evaporative emission system, and/or catalytic converter.

If installed as original equipment by the manufacturer, the catalytic converter will be considered a part of the exhaust emission system on all 1984 and later model vehicles. It will be inspected as a part of the exhaust system on prior to 1984 model vehicles, but only visually inspected for leakage. On 1984 and later model light truck and passenger vehicles, the catalytic converter will be checked for presence and leakage. Some diesel engines are equipped from the manufacturer with catalytic converters. The catalytic converter on these vehicles will also be inspected for presence and leaks only.

The inspection of the exhaust emission system shall not apply to motor vehicles **altered and modified** to use **only** a fuel other than gasoline.

1. Inspection Procedure. Examine visually and reject if:

a. The exhaust emission system has been removed.

b. The exhaust emission system has been disconnected.

c. The plumbing or hoses are loose, broken, leaking, or improperly routed.

d. Air pump (air injection-type) belt is loose, removed, excessively cracked, frayed or has pieces missing.

e. The exhaust emission system has been altered in any manner to make it ineffective.

f. The catalytic converter has been removed, leaking, or disconnected on a 1984 or later model vehicle.

B. Exhaust System. Every motor vehicle shall at all times be equipped with a muffler in good working order and in constant operation.

Muffler defined: A muffler is a device consisting of a series of chambers or baffle plates or other mechanical design for the purpose of receiving exhaust gas from an internal combustion engine and/or turbine wheels for the purpose of receiving exhaust gas from a diesel engine, both of which are effective in reducing noise.

On vehicles manufactured or equipped with a muffler and a turbo, the muffler must be present and in good working order.

The exhaust system includes the manifolds, gaskets, exhaust lines, mufflers, resonators, tail piping, and supportinghardware.

Motor vehicles cannot be equipped with a muffler which is perforated or which was perforated and has been repaired, either by a muffler repair jacket or by patching or in any other way. In those cases where a muffler is perforated at the time of an inspection or has been perforated and has been repaired previous to the inspection, the muffler must be replaced or the vehiclerejected.

Some pickups are equipped with a camper or hard shell cover and are sometimes used for the transportation of passengers. The tailpipe should discharge the exhaust at the rear or sides. This truck modification will be considered as a passenger compartment.

The entire structure of a passenger vehicle or a motor home-type vehicle is considered a passenger compartment. The cab only of all other truck-type vehicles is considered a passenger or luggage compartment.

If the vehicle is equipped with lake pipes or similar devices, such pipes or devices must be securelyplated and bolted or capped.

Dual exhaust systems may be modified to single exhaust systems and single exhaust systems to dual exhaust systems provided the modification does not violate requirements concerning exhaust emission systems.

Inspection of exhaust systems covers the discharge of exhaust fumes and is not concerned with the noise level.

Holes in the exhaust system made by the manufacturer for drainage are not cause for rejection. The tailpipe must direct the exhaust fumes out from under the passenger compartment.

On pickups not equipped with a camper or hard shell cover, holes or leaks in the tailpipe extending beyond the passenger compartment will not be cause for rejection.

1. Inspection Procedure. The exhaust system shall be examined visually while the engine is running to determine efficiency of the system.

2. Inspect for and reject if:

a. Vehicle is not equipped with a muffler.

b. Any joint is loose or leaking, including manifolds. Does not include minor leakage at exhaust control valve (manifold damper or heat riser valve).

c. Manifold is cracked or broken causing leakage.

d. Holes, leaking seams, or patches on the muffler, resonators, exhaust pipe, tailpipe, or catalyticconverter.

e. Exhaust system is not secured to the vehicle by mounting brackets designed for exhaust systems (wire is not acceptable).

f. Any brackets are loose, broken, or missing.

g. There is excessive vibration of exhaust line.

h. Any part of the exhaust system passes through the passenger compartment.

i. The tailpipe is broken, pinched, or eroded off to the extent to allow exhaust fumes to penetrate into the interior of the passenger compartment.

j. The tailpipe fails to discharge exhaust from the rear or sides or top of the passenger compartment of the vehicle.

k. Any exhaust system determined to be leaking at a point forward of or directly below the driver/sleeper compartment.

l. A bus exhaust system leaking or discharging to the atmosphere:

(1) Gasoline powered – excess of 6 inches forward of the rearmost part of the bus.

(2) Other than gasoline powered – in excess of 15 inches forward of the rearmost part of the bus.

(3) Other than gasoline powered – forward of a door or window designed to be opened (exception: emergencyexits).

m. No part of the exhaust system of any motor vehicle shall be so located as would be likely to result in burning, charring, or damaging the electrical wiring, the fuel supply, or any combustible part of the motor vehicle.

15.7 Frames

A. Inspect for and reject if:

1) Frame Members:

a. Any cracked, broken, loose, or sagging frame members.

b. Any loose or missing fasteners including fasteners attaching functional component such as engine, transmission, steering gear, suspension, body parts, and fifth wheel.

2) Tire and Wheel Clearance:

a. Any condition, including loading that causes the body or frame to be in contact with a tire or any part of the wheel assembly.

3) Adjustable Axle Assemblies (Sliding Subframe):

a. Adjustable axle assembly with locking pins missing or not engaged on.

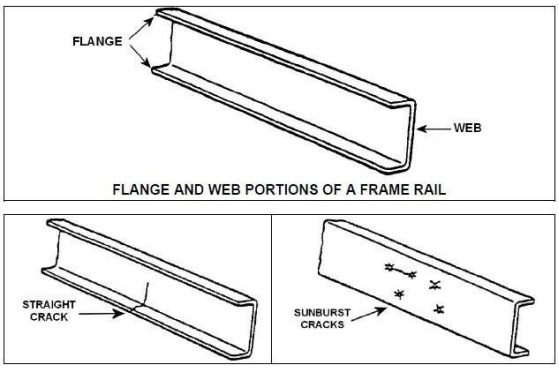

FLANGE AND WEB PORTIONS OF A FRAME RAIL

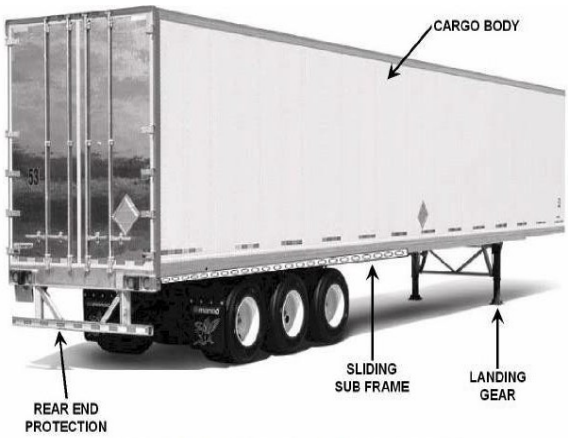

SLIDING SUB FRAME AND REAR END PROTECTION

15.8 Fuel System

1. Inspect for and reject if:

   a. A fuel system with a visible leak at anypoint.

   b. A fuel tank filler cap missing.

   c. A fuel tank not securely attached to the motor vehicle by reason of loose, broken or missing mounting bolts or brackets (some fuel tanks use springs or rubber bushing to permit movement).

   d. Every applicable gasoline-powered vehicle from 2-24 years old will also be checked in accordance with Chapter 4 to determine if the gas cap is defective.

15.9 Hazard Warning Lamps

Every bus, truck, and truck-tractor shall be equipped with a signaling system that, in addition to signaling turning movements, shall have a switch or combination of switches that will cause the two front turn signals and the two rear signals, including the turn signal lamps on any attached trailer, to flash simultaneously as a vehicular traffic warning. The system shall be capable of flashing simultaneously with the ignition of the vehicle on or off.

1. Inspect for and reject if (Refer to Annex #3 for lighting diagrams):

   a. Lamps are not present or operational.

   b. Not securely mounted, properly located, or repaired with repair tape or repair kit.

   c. Lamp does not emit proper color (Front – Amber; Rear – Amber or Red); lens or bulb painted.

   d. Lens cracked, broken, discolored, missing, or portion of the lens is missing.

   e. Wiring insulation is worn, rubbed bare, or evidence of burning, short circuiting, or poor connection.

   f. Visibility requirements not met (At least 80 inches wide – 500 feet to the front and rear; less than 80 inches wide – 300 feet to the front and rear). LED lights have less than 50% of diodes illuminated. Lamp height is less than 15 inches or more than 72 inches.

   g. Any lamp assembly is cracked allowing water to enter or lamp assembly contains standing water.

15.10 Head Lamps

1. Motor Vehicles. Every motor vehicle shall be equipped with at least two head lamps, at least one on each side of the front of the motor vehicle, which head lamps shall comply with the requirements and limitations set forth in these regulations.

Every head lamp upon a CMV shall be located at a height of not more than 54 inches nor less than 24 inches to be measured from the center of such lamp to the level ground upon which the vehicle stands when such vehicle is without a load.

2. Motorcycles, Motor-Driven Cycles, Mopeds. Every motorcycle, motor-driven cycle, and moped shall be equipped with at least one and not more than two head lamps which shall comply with the requirements and limitations of these regulations.

3. General Provisions. All motor vehicles including motorcycles sold new after January 1, 1948, other than motor-driven cycles (motor scooters and motorbikes), must be equipped with multiple beam head lamps. Single beam head lamps will be permitted on those vehicles sold new prior to January 1, 1948, and on all motor-driven cycles (motor scooters, motorbikes, and mopeds).

There shall be an uppermost distribution of light or composite beam, so aimed and of such intensity as to reveal persons and vehicles at a distance of at least 450 feet ahead for all conditions of loading (motorcycles, motor-driven cycles, and mopeds at a distance of at least 300 feet).

There shall be a lowermost distribution of light or composite beam, so aimed and of sufficient intensity to reveal persons and vehicles at a distance of at least 150 feet ahead.

a. Single beam head lamp: A head lamp which provides only one fixed beam, which is not adjustable from the driver's seat (usually on motor-driven cycles and mopeds only).

b. Multiple beam head lamp: A head lamp which provides more than one beam, which may be selected as required from the driver's seat.

c. Dual head lamp system: Those vehicles using the dual or four head lamp system must be equipped with a combination of a #1 and a #2 type head lamps on each side of the vehicle. The use of any other type of lamp in those sockets is illegal and does not meet the inspection requirements for head lamps. The four head lamp system must be wired to burn as originally designed.

d. Other lamps: Fog lamps, auxiliary passing lamps, auxiliary driving lamps, and parking lamps are not required to be inspected.

4. Headlight Identification:

a. **Sealed Beam Lamps:** Glass headlamps whether round or rectangular and marked with a #1 or #2 which indicates the number of filaments in the headlamp. Sealed Beam Lamps
are a one piece unit with a non-replaceable inner bulb.

b. **Composite Head Lamps:** Consist of a lens, usually contoured to the grill and fenders of the vehicle, a reflector, and one or two halogen bulbs, and marked DOT or SAE on the lamp housing or the bulb. The bulb on this type of headlamp is replaceable.

c. **Projection Head Lamps:** Consist of a lens, usually contoured to the grill and fenders of the vehicle, a reflector, and one bulb with a projection lens.

d. **High Intensity Discharge (HID) Head Lamps:** Produce light via an electric arc rather than through a glowing filament. **Aftermarket HID bulbs installed in composite headlamps are illegal and will not pass state inspection.**

e. Head lamps approved for use on motorcycles and motor-driven cycles cannot be used on an automobile or truck and vice versa.

f. On motorcycles, motor-driven cycles, and mopeds without batteries, the engine should be run at high idle speed to observe operation of head lamp.

4. Preparation for Head Lamp Inspection.

a. Clean head lamp lenses, if necessary.

5. Inspection Procedure. Check operation and condition. (Refer to Annex #3 for lighting diagrams)

a. <u>Sealed Beam Head Lamps</u>
will be inspected and rejected if:

(1) Lamp or Lamp assembly is not securely fastened to the vehicle. Lamp can be easily moved by hand, due to broken fender or loose support

(2) Lamp is improperly connected or does not light the proper filament for different switch positions.

(3) Lamps lens is cracked, broken, discolored, or missing.

(4) Lamp is not of a type meeting Department, DOT, or SAE standards.

(5) Wiring insulation is worn, rubbed bare, or shows any evidence of burning, short circuiting, or poor electrical connections. Wiring is dangling or connections are loose.

(6) Lamp lens is rotated, upside down, canted, or is marked "Right", "Left", #1, or #2 and is not installed as marked.

(7) Lamp fails to function properly in any manner, such as any filament in a head lamp that fails to burn.

(8) Lamp has dirt, any contamination, discoloration, or moisture on the inside.

(9) Lamp switch or dimmer switch does not operate properly or is not conveniently located for the driver.

(10) Foreign material placed on the headlamp lens, such as shields, paint, tape, tinting, etc… that interferes with light beam of the lamp.

(11) Vehicle is not equipped with head lamps as required or lamp is missing

(12) Lamp or lens is other than clear.

(13) Headlamps are not of equal intensity.

(14) Headlamps are mounted more than or less than the prescribed mounting heights.

(15) Lamp is covered by any lens or cover located on the front of the headlamp which is any shade of color other than clear.

(16) There is physical damage that would obviously cause the headlamps to fail to illuminate the roadway ahead of the vehicle.

(17) Retractable Lamps: Must fully open and lock in position.

b. <u>Composite Head Lamps</u>
will be inspected for and rejected if:

(1) Lamp or lamp assembly is not securely fastened to the vehicle. Lamp can be easily moved by hand, due to a broken fender or loose support.

(2) Lamp is improperly connected or does not light the proper filament for the different switch positions.

(3) Lamp lens is broken, missing, or discolored.

(4) Lamp is not of a type meeting Department, DOT, or SAE standards.

(5) Wiring insulation is worn, rubbed bare, or shows any evidence of burning, short circuiting, or poor electrical connections. Wiring is dangling or connections are loose.

(6) Lamp lens is rotated, upside down, or canted.

(7) Lamp fails to function properly in any manner, such as any filament in a head lamp that fails to burn.

(8) Lamp has dirt, standing water, or discolorationinside.

(9) Lamp switch or dimmer switch does not operate properly or is not conveniently located for the driver.

(10) Foreign material placed on headlamp lens, such as shields, paint, tape, tinting, etc… that interferes with the light beam of the lamp.

(11) Headlamp is covered by any lens or cover located in front of the headlamp which is any shade of color other than clear.

(12) Vehicle is not equipped with headlamps as required or lamp is missing.

(13) Lens is other than clear.

(14) Headlamps are not of equal intensity.

(15) Headlamps are mounted more than or less than prescribed mounting heights.

(16) There is physical damage that would obviously cause a headlamp beam to fail to illuminate the roadway ahead of the vehicle sufficiently.

(17) Retractable lamps: must fully open and lock in position.

(c). <u>Projection Head Lamps</u>
will be inspected for and rejected if:

(1) Lamp or lamp assembly is not securely fastened to the vehicle. Lamp can be easily moved by hand, due to a broken fender or loose support.

(2) Lamp is improperly connected or does not light the proper filament for the different switch positions.

(3) Lamp lens is broken, missing, or discolored.

(4) Lamp is not of a type meeting Department, DOT, SAE standards.

(5) Wiring insulation is worn, rubbed bare, or shows any evidence of burning, short circuiting, or poor electrical connections. Wiring is dangling or connections are loose.

(6) Lamp lens is rotated, upside down, or canted.

(7) Lamp fails to function properly in any manner, such as any filament in a head lamp that fails to burn.

(8) Lamp has dirt, standing water, or discolorationinside.

(9) Lamp switch or dimmer switch does not operate properly or is not conveniently located for the driver.

(10) Foreign material placed on headlamp lens, such as shields, paint, tape, tinting, etc… that interferes with the light beam of the lamp.

(11) Headlamp is covered by any lens or cover located in front of the headlamp which is any shade of color other than clear.

(12) Vehicle is not equipped with headlamps as required or lamp is missing.

(13) Lens is other than clear.

(14) Headlamps are not of equal intensity.

(15) Headlamps are mounted more than or less than prescribed mounting heights.

(16) There is physical damage that would obviously cause a headlamp beam to fail to illuminate the roadway ahead of the vehicle.

(17) Retractable lamps: must fully open and lock in position.

(d). <u>High Intensity Discharge Head Lamps</u>
will be inspected for and rejected if:

(1) Lamp or lamp assembly is not securely fastened to the vehicle. Lamp can be easily moved by hand, due to a broken fender or loose support.

(2) Lamp is improperly connected or does not light the proper bulb for the different switch positions.

(3) Lamp lens is broken, missing, or discolored.

(4) Lamp is not of a type meeting Department, DOT, SAE standards.

(5) Wiring insulation is worn, rubbed bare, or shows any evidence of burning, short circuiting, or poor electrical connections. Wiring is dangling or connections are loose.

(6) Lamp lens is rotated, upside down, or canted.

(7) Lamp fails to function properly in any manner.

(8) Lamp has dirt, standing water, or discolorationinside.

(9) Lamp switch or dimmer switch does not operate properly or is not conveniently located for the driver.

(10) Foreign material placed on headlamp lens, such as shields, paint, tape, tinting, etc… that interferes with the light beam of the lamp.

(11) Headlamp is covered by any lens or cover located in front of the headlamp which is any shade of color other than clear.

(12) Vehicle is not equipped with headlamps as required or lamp is missing.

(13) Lens is other than clear.

(14) Headlamps are not of equal intensity.

(15) Headlamps are mounted more than or less than prescribed mounting heights.

(16) There is physical damage that would obviously cause a headlamp beam to fail to illuminate the roadway ahead of the vehicle.

(17) Retractable lamps: must fully open and lock in position.

15.11 Horn

Every motor vehicle shall be equipped with a horn (electric or air) in good working order and capable of emitting a sound audible for a distance of 200 feet or more, but no horn shall emit an unreasonably loud or harsh sound or a whistle.

Bulb or hand-operated horn is acceptable if original vehicle equipment.

1. Inspection Procedure:

   a. Sound horn.

   b. Check actuating device.

   c. Examine wiring - mounting.

2. Inspect for and reject if:

   a. Vehicle is not equipped with a horn.

   b. Horn or horn switch is not securely fastened.

   c. Wiring insulation is worn, rubbed bare, or shows any evidence of burning, short circuiting, or poor connections.

   d. Horn switch not readily accessible to vehicle operator.

   e. Horn is actuated by grounding two bare wires or similar method.

   f. Sound is not audible under normal conditions for 200 feet.

   g. Horn emits an unusually loud or harsh sound or whistle.

   h. Operation of the horn interferes with the operation of any other circuit.

   i. Horn switch missing or inoperative.

15.12 Identification Lamps

All buses, trucks, and truck-tractors 80 inches or more in overall width must be equipped with three identification lamps of amber color mounted on the cab of the vehicle, one as close to the vertical center line of the vehicle as practicable and one on each side of the center line, not less than 6 inches or more than 12 inches.

All buses, trucks, and trailers 80 inches or more in overall width must be equipped with three identification lamps of red color mounted on the rear of the vehicle as high as practicable. One mounted as close as possible to the center line of the vehicle and one on each side of the center line of not less than 6 inches or more than 12 inches.

1. Inspect for and reject if: (Refer to Annex #3 for lighting diagrams)

   a. Lamps are not present.

   b. Not securely mounted, properly located or repaired with repair tape or repair kit.

   c. Lamp does not emit proper color; lens or bulb painted; or not steady burning.

   d. Lens cracked, broken, discolored, missing, or a portion of the lens is missing.

   e. Wiring insulation is worn, rubbed bare, or evidence of burning, short circuiting, or poor connection

   f. Lamps are not clearly visible in normal sunlight. LED lights have less than 50% of diodes illuminated.

   g. Any lamp assembly is cracked allowing water to enter or any lamp assembly contains standing water.

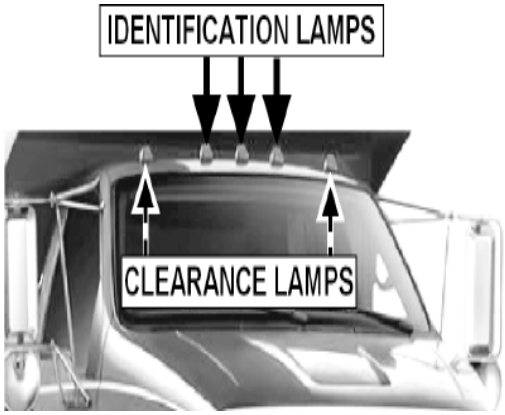

15.13 License Plate Lamp

Either a tail lamp or a separate lamp shall be so constructed and placed as to illuminate with a white light the rear registration plate and render it clearly legible for a distance of 50 feet to the rear. Any such lamp shall be so wired as to be lighted when the head lamps or auxiliary driving lamps are lighted. On vehicles such as truck-tractors which require no rear registration plate, a license plate lamp would not be required. If two license plates are issued, a license plate lamp is required.

Do not reject a vehicle because the rear registration plate is obstructed.

1. Inspection Procedure. Check operation and condition visually.

2. Inspect for and reject if: (Refer to Annex #3 for lighting diagrams)

a. Lamp is not present, steady burning, or operational. LED lights have less than 50% of diodes illuminated.

b. Lamp is not securely mounted to the vehicle.

c. Lamp is not placed to illuminate with a white light, the rear registration plate. (Only one lamp is required.)

d. Wiring insulation is worn, rubbed bare, or shows any evidence of burning, short circuiting, or poor electrical connections.

e. Lamp is not wired so as to be lighted when head lamps or auxiliary driving lamps are lighted.

f. Lamp emits a glaring light to the rear.

g. Lens is cracked or repaired with repair tape or repair kit. Lens or a portion of the lens is missing.

h. Lamp assembly is cracked allowing water to enter or the lamp assembly contains standing water.

i. Lamp does not meet the visibility requirement.

15.14 Mirrors

Every bus, truck, and truck-tractor shall be equipped with two rear-vision mirrors, one at each side, firmly attached to the outside of the motor vehicle, and so located as to reflect to the driver a view of 200 feet to the rear, along both sides of the vehicle.

Only one outside mirror shall be required, which shall be on the driver's side, on trucks which are so constructed that the driver has a view to the rear by means of an interior mirror.

In driveaway-to waway operations, the driven vehicle shall have at least one mirror furnishing a clear view to the rear.

1. Inspect for and reject if:

a. Proper number of mirrors not present

b. Mirror does not provide clear view to rear of 200 feet.

c. Mirror creates interference with driver's forward vision.

d. Reflective surface of mirrors is cracked, broken, peeled, tarnished, or has sharp edges.

e. Mirror not mounted securely to prevent swing or excessive vibration.

15.15 Reflective Sheeting/Reflex Reflectors - Conspicuity System

Truck-tractors manufactured on or after July 1, 1997 and any trailer or semi-trailer manufactured on or after December 1, 1993 that is 80 inches or more wide and 10,001 pounds or more GVWR, except pole trailers and mobile office/housing trailers, require conspicuity materials (retroreflective sheeting and/or reflex reflectors meeting the requirements of FMVSS No. 108). If the GVWR plate is not present on a trailer or semi-trailer, then an actual or registered weight of 10,001 pounds or more will apply. Trailers and semi-trailers manufactured before December 1, 1993 are required to be retrofitted with the conspicuity system, except for pole trailers and mobile office/housing trailers.

Refer to Annex #4 for conspicuity system requirement diagrams for trailer types and truck-tractors.

A. Inspection Procedure. Inspect for proper placement, coverage, and color of the conspicuity system.

1. Color combinations of red and white shall be used, beginning with red or white, along the sides and lower rear of the trailer.

2. The centerline for each reflective strip shall be between 15 inches and 60 inches above the road surface or as close as practicable with the trailer empty.

3. Must be an approved type. The manufacturer certification will consist of one of the following markings:

a. DOT – C (Rectangular Reflex Reflectors);

b. DOT – C2, 2 inch (50mm);

c. DOT – C3, 3 inch (75mm); or

d. DOT – C4, 4 inch (100mm).

B. Inspect for and reject if:

1. Trailer is not equipped with reflective sheeting, tape, or reflex reflectors.

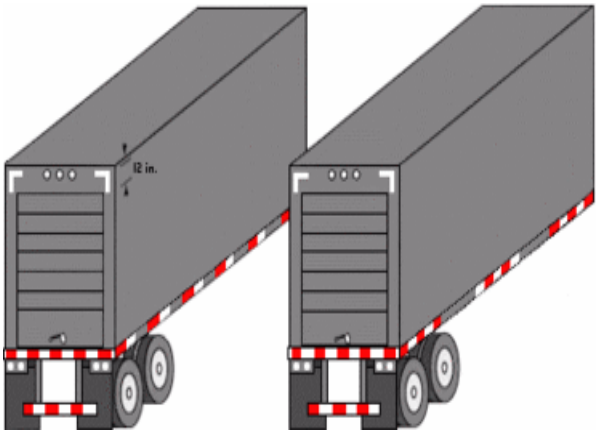

2. Not properly placed or secured to the trailer or proper colors used:

a. on each side placed horizontally:

(1) the total length of the sections do not equal to at least one half of the total length of the trailer.

(2) the placement is not reasonably evenly distributed down the full length of the trailer and as near the front and rear as practicable.

b. on the lower rear, placed horizontally:

(1) the total length does not extend asnear as practicable across the full rear of the trailer.

(2) the placement is not as low as practicable.

c. on the underside protection device, if equipped:

(1) placed horizontally across the full width of the device.

d. on the upper rear:

(1) the placement is not as close as practicable to the extreme outer and upper dimensions of the trailer.

(2) two pairs of white reflective sheeting or reflex reflectors, each section at least 12 inches long, must be positioned horizontally and vertically on the right and left upper corners of the rear of the body.

(3) the reflective material is not white in color.

3. Reflective material is excessively discolored, deteriorated, or painted; to the extent the ability to reflect is substantiallyaffected.

4. Truck-tractor is not equipped with reflective sheeting as follows:

a. Upper rear of the cab:

(1) Two pairs of white reflective sheeting or reflex reflectors, each section at least 12 inches long, must be positioned horizontally and vertically on the left and right upper corners of the rear of the cab body.

(2) Lower rear of the truck tractor: Red and white sheeting or reflex reflectors on the mounting bracket of the safety guard (mud flap).

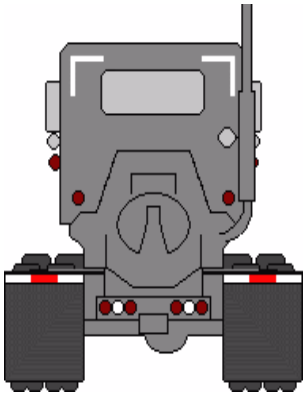

15.16 Reflectors(Rear/Side)

A. Reflectors (Rear). Every motor vehicle, trailer, semitrailer, and pole trailer shall carry on the rear, either as a part of the tail lamps or separately, two or more red reflectors. Motorcycles, motor-driven cycles, and mopeds shall have mounted on the rear, either as a part of the tail lamp or separately, at least one red reflector.

Every reflector upon any vehicle shall be of such size and characteristics and so mounted as to be visible at night from all distances within 600 feet to 100 feet from such vehicle when directly in front of the lawful lower beams of head lamps, except that reflectors on passenger cars, motorcycles, and motor-driven cycles manufactured or assembled prior to January 1, 1972, shall be visible at night from all distances within 350 feet to 100 feet when directly in front of lawful upper beams of the head lamps.

Reflectors on all motor vehicles shall be mounted at a height of not less than 15 inches, nor more than 60 inches measured from the center of such reflector to the level ground upon which the vehicle stands.

If the highest part of the permanent structure of the vehicle is less than the height required, the reflector shall be mounted as high as that part of the permanent structure will permit.

Rear reflectors on a vehicle shall reflect a red color. Red reflectors required on the rear of a vehicle may be incorporated with the tail lamp assembly.

Required rear reflectors shall be mounted with one on each side of the center of the vehicle.

Rear reflectors on pole trailers may be mounted on each side of the bolster or load.

Refer to Annex #3 for lighting diagrams.

1. Inspection Procedure. Check condition and mounting.

2. Inspect for and reject if:

a. Reflector is not present.

b. Reflector is not of red color.

c. Reflector is not properly and/or securely mounted to the vehicle.

d. Reflector is cracked to the extent that the reflecting ability is impaired.

e. Reflector is discolored, deteriorated, or painted.

f. Visibility distance is not as required.

g. Requirements shown on lighting diagram are not met (Annex #3). Reflector height requirements are not met.

B. Reflectors (Side).

1. Required on all:
   a. Buses 80 inches or more in overall width.
   b. Trucks 80 inches or more in overall width.
   c. Trailers and semitrailers 80 inches or more in overall width.
   d. Trailers and semitrailers 30 feet or more in overall length.
   e. Pole trailers.

2. Every required reflector upon any of the above described commercial vehicles shall be of such size and characteristics and so maintained as to be readily visible at nighttime from all distances within 600 feet to 100 feet from the vehicle when directly in front of the lawful lower beams of head lamps, except that the visibility for reflectors on vehicles manufactured or assembled prior to January 1, 1972, shall be measured in front of lawful upper beams of head lamps.

3. Reflectors on commercial vehicles should be mounted at a height of not less than 15 nor higher than 60 inches above the ground on which the vehicle stands.

   a. If the highest part of the permanent structure of the vehicle is less than the height required, the reflector shall be mounted as high as that part of the permanent structure will permit.

   b. Reflectors mounted on the sides near the front of a vehicle shall reflect an amber color.

   c. Reflectors mounted on the sides near the rear of a vehicle shall reflect a red color.

   d. On buses and trucks 80 inches or more in overall width and trailers and semitrailers 80 inches or more in overall width:

      1) On each side, two reflectors, one at or near the front (amber) and one at or near the rear (red).

   e. On trailers and semitrailers 30 feet or more in overall length:

      1) On each side one amber reflector, centrally located with respect to the length of the vehicle.

   f. On pole trailers:

      1) One amber reflector at or near the front of the load (if loaded.)

   g. Trailers which are equipped with approved conspicuity material (reflective sheeting) are not required to be equipped with the side reflex reflectors required in this part if:

      1) The conspicuity material is placed at the locations where reflex reflectors are required; and

      2) The conspicuity material when installed on the trailer meets the geometric visibility requirements for the reflex reflectors.

      3) See Annex #4 for conspicuity requirements.

4. Inspection Procedure. Check condition and mounting.

5. Inspect for and reject if:

   a. Reflectors are not present.

   b. Reflectors are not of the required color for the location on the vehicle.

   c. Reflectors are not properly and/or securely mounted to the vehicle.

   d. Reflector is cracked to the extent that the reflecting ability is impaired.

   e. Reflectors are discolored, deteriorated, or painted.

   f. Requirements shown on lighting diagram are not met (Annex #3). Reflector height requirements are not met.

   g. Visibility distance is not as required.

15.17 Safety Guards or Flaps

A. Safety guards or flaps are required on all trucks, trailers, or semi-trailers (in combination with a towing vehicle), if the rearmost axle of the vehicle (or combination) has at least four tires or at least two super single tires. A super single tire is a wide-base, single tire that may be used in place of two standard tires on the same axle.

Super Single Tires

Safety guards or flaps are not required on:

1) Buses;
2) Motor homes;
3) Pole trailers; or
4) Truck-tractors.

Safety guards or flaps shall be located and suspended behind the rearmost wheels of such vehicle or if in combination behind the rearmost wheels of such combination to within 12 inches of the surface of the roadway. Safety guards or flaps shall be of metal, rubber, rubberized material, or other substantial material, capable of remaining in place behind the rear wheels by their own weight while the said vehicle is being operated.

When trailers and semitrailers are presented for inspection in combination, each trailer or semitrailer will be considered a separate vehicle and safety guards or flaps will be required on the rearmost axle of each trailer or semitrailer.

1. Inspection Procedure. Check for presence and condition.

2. Inspect for and reject if:

a. Safety guard or flap is not present.

b. Safety guard or flap is not securely mounted.

c. Safety guard or flap is not as wide as the tires that it is protecting.

d. Safety guard or flap is split or torn to the extent that it is ineffective.

e. The bottom edge of safety guard or flap is more than twelve (12) inches from the surface of the roadway.

15.18 Seat Belts

A. Front seat belts are required on every motor vehicle in which front seat belt anchorages were a part of the manufacturer's original equipment on the vehicle.

Anchorages defined: A seat belt anchorage consists of a threaded hole in a suitable structure to receive the seat belt attachment fittings or a circular anchor which is welded to the vehicle chassis. Self-treading bolts are inserted into the anchor to form the complete seat belt anchorage assembly.

1. Inspection Procedure. Inspect front lap seat belts for frayed, split, or torn webbing; malfunctioning buckles; and loose or damaged anchorages to the floor pan. Vehicles originally equipped with automatic seat belts (shoulder belts) without front lap seat belts will have the automatic belts inspected.

Front lap belts only will be inspected in all other vehicles. The ignition seat belt interlock system is not an item of inspection.

2. Inspect for and reject if:

a. Front lap seat belts are required and not present.

b. Seat belt webbing is frayed, split, or torn.

c. Belt buckles loose or inoperative.

d. Belt Anchorages or attachment fittings are loose, badly corroded, missing, or not fastened to belt.

e. All seat belt anchor bolts are not securely fastened to floor or are missing.

f. Pelvic restraint is not present.

g. Seat belt will not adjust to allow proper fit.

15.19 Side Marker Lamps

1. Required on all:

a) Buses 80 inches or more in overall width. Trucks 80 inches or more in overall width.
b) Trailers and semitrailers 80 inches or more in overall width.
c) Trailers and semitrailers 30 feet or more in overall length.
d) Pole trailers.

a. Side marker lamps shall, so far as is practicable, be mounted on the permanent structure of the vehicle in such a manner as to indicate the length of the vehicle.

b. Side marker lamps and clearance lamps may be mounted in combination, provided illumination is given as required by law.

c. Side marker lamps mounted on the frontor on the sides near the front of a vehicle shall display an amber color.

d. Side marker lamps mounted on the rear or on the sides near the rear of a vehicle shall display a red color.

e. Side marker lamps shall be visible under normal atmospheric conditions at a distance between 500 feet and 50 feet from the vehicle on which mounted.

f. On buses and trucks 80 inches or more in overall width and trailers and semitrailers 80 inches or more in overall width:

1) Two side marker lamps, one on each side, one at or near the front and one at or near the rear.

g. All trailers and semitrailers 30 feet or more in overall length are required to have mounted centrally located with respect to the length of the vehicle:

1) On each side, one amber side marker lamp.

h. On pole trailers:

1) On each side, one amber side marker lamp at or near the front of the load (if loaded).

2) On the rearmost support for the load, one combination marker lamp showing amber to the front and red to the rear and side, or cluster of required color lamps.

2. Inspection Procedure. Check operation and condition visually.

3. Inspect for and reject if: (Refer to Annex #3 for lighting diagrams)

a. Lamps are not present.

b. Lamps are not securely mounted, properly located, or repaired with repair tape or repair kit.

c. Lamps do not emit required color; lens or bulb painted; or not steady burning.

d. Visibility requirements are not met. LED lights have less than 50% of diodes illuminated.

e. Lenses are discolored, missing, or a portion of the lens is missing.

f. Wiring insulation is worn, rubbed bare, or shows any evidence of burning, short circuiting, or poor electrical connections.

g. Lens is cracked.

h. Any lamp assembly is cracked allowing water to enter or lamp assembly contains standing water.

i. Requirements shown on lighting diagram are not met (See Annex #3). Side marker lamp height requirements are not met.

15.20 Steering Mechanism

A. The steering system of the vehicle must be inspected to determine if excessive wear and/or maladjustment of the steering linkage and/or steering gear exists. Wear and adjustment of the steering system will be checked by measuring lash. The vehicle must be on a dry surface.

Lash defined: Lash is the condition in which the steering control can be turned through some part of a revolution without front wheel motion. The wheels should be loaded and positioned straight ahead.

Jamming defined: Jamming is any obstruction to the turning of the steering control caused by interference between some components of the steering system. The obstruction would include tires too large or damaged fenders that would interfere with a full right or left turn.

B. Inspection Procedure. Lash or Free Play: With steering axle tires in straight ahead position, turn steering wheel until the turning motion can be observed at the steering axle tires. Measure lash. On vehicles equipped with power steering the engine must be running.

C. Inspect for and reject if:

1) Steering Lash (See Chart Below):

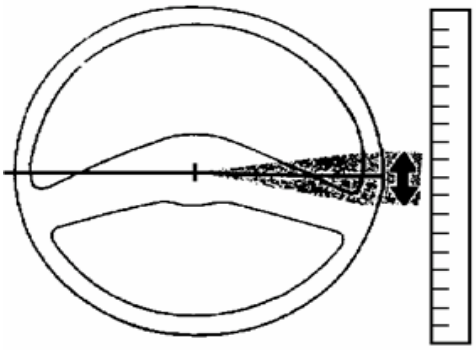

STEERING LASH

Steering Wheel Diameter	Manual Steering System	Power Steering System

For steering wheel diameters not listed, the steering wheel lash shall not exceed 14 degrees angular rotation for manual steering systems and 30 degrees angular rotation for power steering systems.

2) SteeringColumn:

a. Any absence or looseness of U-bolt(s) or position parts on steering column.

b. Worn, faulty or obviously repair welded universal joint(s) on steering column.

c. Steering wheel not properly secured or not securely mounted to the steering shaft.

d. Tilt steering wheel fails to lock into position.

e. On vehicles equipped with flexible couplings, or energy-absorbing steering columns, when it is obvious through a visual inspection of the vehicle that the column has been damaged and is in an unsafe condition, it should be rejected.

3) Steering System:

a. It is impossible to turn the steering wheel from full right to full left without binding or jamming other than at wheel stops.

b. Modification of the steering system so as to affect the proper steering of the vehicle or steering wheel has been modified or replaced with one that is noticeably smaller than original factory equipment.

c. Any modification or other condition that interferes with free movement of any steering component.

d. Steering mechanism is not firmly attached and free of frame cracks or missing bolts.

e. On motorcycles and motor-driven cycles, handlebars or steering head is bent, loose, broken or damaged so as to cause unsafe condition in steering.

4) Front Axle Beam and All Steering Components Other than Steering Column:

a. Any crack or obvious welded repair(s).

5) Steering Gear Box:

a. Any mounting bolt(s) loose or missing.

b. Any crack(s) in gear box or mounting brackets.

6) Pitman Arm:

a. Any looseness of the pitman arm on the steering gear output shaft.

7) Power Steering. On vehicles equipped with power steering, the fluid level, belt tension and belt condition must be inspected for compliance before starting the engine to check for proper operation of the steering.

a. Auxiliary power assist cylinder loose.

b. Visible leaks in power steering unit or hoses.

c. Power steering belt is excessively cracked, frayed, or has pieces missing or tension is not adequate. Serpentine belts are not to be rejected merely for cracks in the ribs.

d. Fluid in power steering unit is below manufacturer's recommended level. Do not overfill.

8) Ball and Socket Joints:

a. Any movement under steering load of a stud nut.

b. Any motion, other than rotational, between any linkage member and its attachment point of more than ¼ inch.

9) Tie Rods and Drag Links:

a. Loose clamp(s) or clamp bolt(s) on tie rods or drag links.

b. Any looseness in any threaded joint.

10) Nuts:

a. Nut(s) loose or missing on tie rods, pitman arm, drag link, steering arm, or tie rod arm.

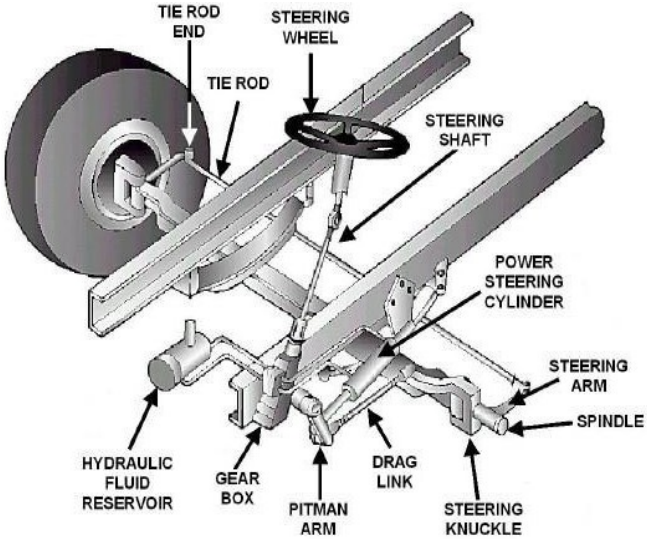

15.21 Stop Lamps

Every motor vehicle, trailer, semitrailer, and pole trailer shall be equipped with two or more stop lamps, except motorcycles and motor-driven cycles, which require one stop lamp. Passenger cars and trucks manufactured or assembled prior to the model year 1960 shall be equipped with at least one stop lamp.

A stop lamp on a CMV must emit a red light and be visible from a distance of not less than 300 feet to the rear in normal sunlight. The stop lamp shall be actuated upon application of the service brake and which may, but need not, be incorporated with one or more other rear lamps.

1. Inspection Procedure. Check operation and condition visually.

2. Inspect for and reject if: (Refer to Annex #3 for lighting diagrams)

a. Required lamp or lamps are not present.

b. Lamp is not securely mounted to the vehicle.

c. Lamp does not emit a steady burning red light which is actuated on application of the service (foot) brake.

d. Lamp is not visible from a minimum distance of 300 feet to the rear of the vehicle to which it is attached. LED lights have less than 50% of diodes illuminated. Lamp height is less than 15 inches or more than 72 inches.

e. Lamp lens is painted, missing; a portion of the lens is missing, discolored, does not fit properly, or repaired with repair tape or repair kit.

f. Wiring is shoddy or electrical connections are poor.

g. Lamp projects a glaring or a dazzling light.

h. Lamp is not mounted on rear of vehicle.

i. Lens is cracked.

j. Any lamp assembly is cracked allowing water to enter or the lamp assembly contains standing water.

k. Lamps are not of equal intensity.

Number of Stop Lamps Required for a CommercialVehicleInspection:

a. Passengers cars manufactured prior to model year 1960: 1 Stop Lamp

b. Passenger cars manufactured in model year 1960 to model year 1984: 2 Stop Lamps

c. Passenger cars manufactured on or after September 1, 1985 to present: 2 Stop Lamps and a Center High-Mount Stop Lamp

d. Multipurpose passenger vehicle (e.g. SUV, pickup truck, vans), truck, bus, whose overall width is less than 80 inches, whose GVWR is 10,000 lbs. or less, manufactured before September 1, 1993: 2 Stop Lamps

e. Multipurpose passenger vehicle (e.g. SUV, pickup truck, vans), truck, bus, whose overall width is less than 80 inches, whose GVWR is 10,000 lbs. or less, manufactured on or after September 1, 1993: 2 Stop Lamps and a Center High-Mount Stop Lamp

f. Commercial vehicles 80 inches or more in width and whose GVWR is 10,001 lbs. or more: 2 Stop Lamps

g. Trailers, Semitrailers, Pole Trailers: 2 Stop Lamps

h. Motorcycles and motor-driven cycles: 1 Stop Lamp

3. Center High Mount Stop Lamp:
Each passenger car manufactured on or after September 1, 1985, and each multipurpose passenger vehicle (e.g. SUV), truck, bus, whose overall width is less than 80 inches, whose GVWR is 10,000 lbs. or less, manufactured on or after September 1, 1993, shall be equipped with a center high-mounted stop lamp. A center high-mounted stop lamp cannot be substituted for any other required stop lamps.

1. Inspection Procedure. Check operation and condition visually.

2. Inspect for and reject if:

a. . Required lamp is not present. This light will not be inspected if obstructed by camper shells, tool boxes, luggage racks etc. However, if the camper shell is equipped with a center high mount stop lamp, it must be operational at the time of inspection.

b. Lamp is not securely mounted to the vehicle.

c. Lamp does not emit a steady burning red light which is actuated on application of the service (foot) brake.

d. Lamp is not visible from a minimum distance of 300 feet to the rear of the vehicle. The center high-mounted stop lamp has less than 50% of its bulbs or LED diodes illuminated.

e. Lamp lens is painted, missing, discolored, or does not fit properly. Any aftermarket tint has been applied over the Center High-Mount Stop Lamp.

f. Wiring is shoddy or electrical connections are poor.

g. Lamp projects a glaring or a dazzling light.

h. Lamp is not mounted on rear of vehicle.

i. Lens is cracked or broken to the extent that a portion of the lens is missing and/or separated, permitting light from the bulb to emit through the crack or break.

j. Center High-Mount Stop Lamp must be located on the centerline of the vehicle if manufacturer equipped.

k. Lamp lenses repaired with repair tape or repair kit.

l. Lamp assembly is cracked allowing water to enter or the lamp assembly contains standing water.

15.22 Suspension

1. Inspect for and reject if:

a. U-bolt, spring hanger, or other axle positioning parts are cracked, broken, loose, or missing.

b. Any leaves in a leaf spring assembly are broken or missing.

c. Any broken main leaf in a leaf spring assembly (includes assembly with more than one main spring).

d. Coil spring broken.

e. Rubber spring missing.

f. One or more leaves displaced in a manner that could result in contact with a tire, rim, brake drum, or frame.

g. Broken torsion bar spring in a torsion bar suspension.

h. Deflated air suspension, i.e. system failure, leak, etc.

i. Any part of a torque, radius, or tracking component assembly or any part used for attaching the same to the vehicle frame or axle is cracked, loose, broken, or missing. Does not apply to a loose bushing in torque or track rods.

DAMAGED SPRING SUSPENSION

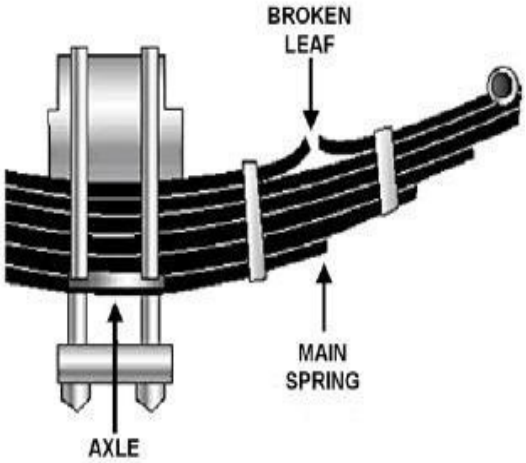

AUXILIARY OR HELPER SPRING SUSPENSION

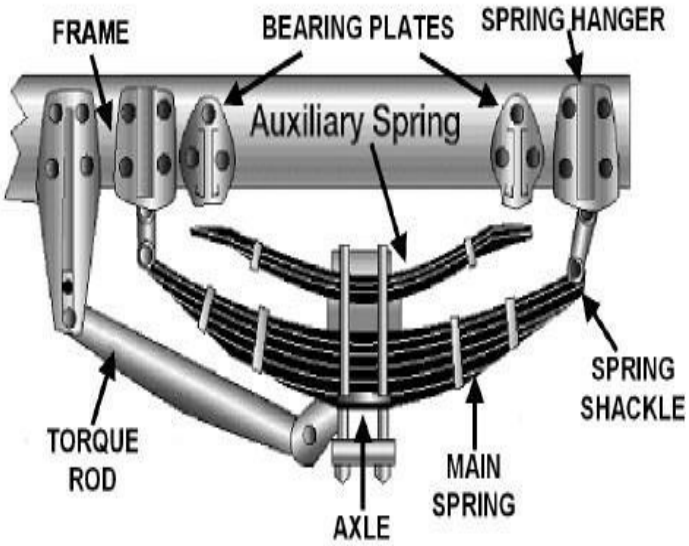

TYPICAL REAR AXLE SUSPENSION

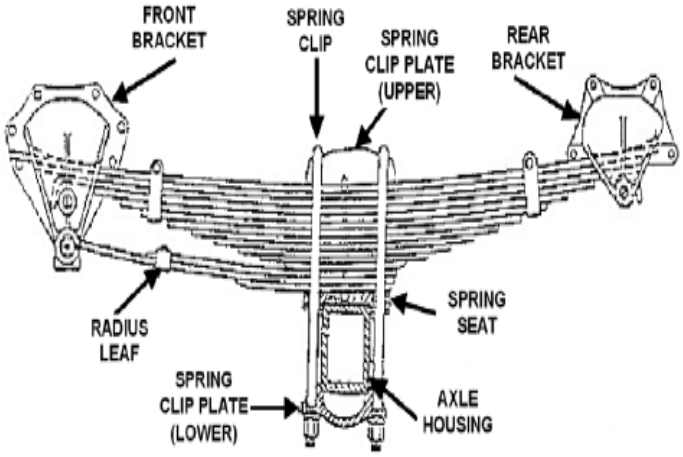

15.23 Tail Lamps

Every motor vehicle, trailer, semitrailer, pole trailer, and any other vehicle which is being drawn at the end of a combination of vehicles shall be equipped with at least two tail lamps mounted on the rear which, when lighted, shall emit a red light plainly visible from a distance of 1,000 feet to the rear. Tail lamps shall be mounted on the same level and as widely spaced laterallyas practicable.

Every tail lamp upon every CMV shall be located at a height of not more than 72 inches nor less than 15 inches. Tail lamps are used only to designate the rear of a vehicle.

At least two tail lamps are required on all motor vehicles, trailers, semitrailers, and pole trailers, except that at least one tail lamp is required on motorcycles, motor-driven cycles, and mopeds and all 1959 model year and earlier passenger cars and trucks.

1. Inspection Procedure. Check operation and condition visually. Vehicles that are equipped from the manufacturer with approved lenses which are clear and lighted by LED lights will pass state inspection. Vehicles that are equipped with aftermarket lenses which are clear and lighted by a red bulb will be rejected. There are no red bulbs currently approved for use on vehicles.

2. Inspect for and reject if: (Refer to Annex #3 for lighting diagrams)

a. Required lamp or lamps are not present.

b. Lamp is not securely mounted to vehicle.

c. Lamp does not emit a steady burning red light plainly visible 1,000 feet to the rear. LED lights have less than 50% of diodes illuminated.

d. Lamp lens is painted, missing, discolored, does not fit properly, or repaired with repair tape or repair kit.

e. Wiring is shoddy or electrical connections are poor.

f. Lamp is not wired so as to be lighted when head lamps or auxiliary driving lamps are lighted.

g. Lamp is obstructed by any part of the body

h. Lamp does not emit a red color

i. Lamps are not mounted on the same level and as widely spaced laterally as practicable. Lamp height is less than 15 inches or more than 72 inches.

j. Lamps are not mounted on rear of vehicle.

k. Lens is cracked, missing, or a portion of the lens is missing.

l. Any lamp assembly is cracked allowing water to enter or lamp assembly contains standing water.

m. Lamps are not of equal intensity.

15.24 Tires

1. Inspect any tire on Steering Axle for and reject if:

   a. Has less than 4/32-inch tread when measured at any point on a major tread groove.

   b. Has body ply or belt material exposed through the tread or sidewall.

   c. Has any tread or sidewall separation.

   d. Has a cut where the ply or belt material is exposed.

   e. Labeled "Not for Highway Use" or displaying other marking which would exclude use on the steeringaxle.

   f. Any bus equipped with regrooved, recapped or retreaded tires on the steering axle.

   g. A truck or truck-tractor with regrooved tires with a load-carrying capacity equal to or greater than 4,920 pounds on the steering axle.

   h. A tube-type radial tire without radial tube stem markings. These markings include a red band around the tube stem, the word "radial" embossed in metal stems, or the word "radial" molded in rubber stems.

   i. Mixing bias and radial tires on the steering axle.

   j. The tire flap protrudes through valve slot in rimand touches stem.

   k. Boot, blowout patch, or other ply repair.

   l. Weight carried exceeds tire load limit. This includes overloaded tire resulting from low air pressure.

   m. Tire is flat or has noticeable (e.g., can be heard or felt) leak.

   n. So mounted or inflated that it comes in contact with any part of the vehicle.

2. Inspect all other tires and reject if:

   a. Weight carried exceeds tire load limit. This includes overloaded tire resulting from low air pressure.

   b. Tire is flat or has noticeable (e.g., can be heard or felt) leak.

   c. Has body ply or belt material exposed through the tread or sidewall.

   d. Has any tread or sidewall separation.

   e. Has a cut where ply or belt material is exposed.

   f. So mounted or inflated that it comes in contact with any part of the vehicle. (This includes a tire that contacts its mate).

   g. Is marked "Not for Highway Use" or otherwise marked and having like meaning.

   h. Has less than 2/32-inch tread when measured at any point on a major tread groove.

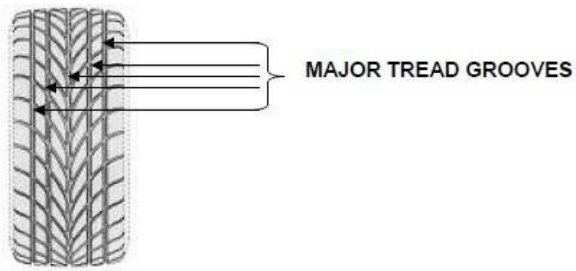

15.25 Turn Signal Lamps

Every motor vehicle, trailer, semitrailer, and pole trailer shall be equipped with electrical turn signal lamps, except that passenger cars and trucks less than 80 inches in width and manufactured or assembled prior to the model year 1960 need not be equipped with electrical turn signal lamps.

If the bed, body, cab, load, and any other equipment on a vehicle or combination of vehicles exceeds 24 inches or more to the left of the center of the top of the steering post in the same horizontal plane (that is, as high as the center of the top of the steering post) or when the distance from the center of the top of the steering post to the rear limit of the body or load exceeds 14 feet, then turn signal lamps are required, even though a hand and arm signal can be seen and the vehicle was manufactured or assembled prior to model year 1960.

Required turn signal lamps must be visible to the front and to the rear of the vehicle.

1. Electric turn signal lamp types:

a. Single-faced units.

b. Double-faced units.

c. Arrow-faced units.

d. Kits designed to be used in conjunction with the parking light assembly.

2. Electric turn signal lamp flashers. All open-faced and arrow-type turn signal lamps must flash on and off in order to clearly indicate an intention to turn.

Turn signal lamps are required on those vehicles manufactured with a right-hand (steering wheel) drive, regardless of model year.

A single lamp (large double-faced unit) on each side of a truck-tractor, which is visible to the front and rear, will suffice for turn signal lamps.

3. Turn signal lamp mounting. The lamps on a CMV showing to the front shall be mounted on the same level and as widely spaced laterally as practicable and, when signaling, shall emit amber light.

The lamps showing to the rear shall be mounted on the same level and as widely spaced laterally as practicable and, when signaling, shall emit a red or amber light.

Turn signal lamps on vehicles 80 inches or more in overall width shall be visible from a distance of not less than 500 feet to the front and rear in normal sunlight. Turn signal lamps may, but need not, be incorporated in other lamps on the vehicle.

Turn signal lamps shall indicate an intention to turn by flashing lamps showing to the front and rear of a vehicle. On a combination of vehicles, turn signal lamps shall indicate an intention to turn by flashing lamps to that side of the vehicle or combination toward which the turn is to be made.

Motorcycles, motor-driven cycles, and mopeds are not required to be equipped with turn signal lamps.

Semaphore or mechanical arm devices are not acceptable as turn signal lamps.

4. Inspection Procedure. Check operation and condition visually.

5. Inspect for and reject if: (Refer to Annex #3 for lighting diagrams)

a. Lamps are required and not present.

b. Device is not securely mounted or properly located on the vehicle. Lamp height is less than 15 inches or more than 83 inches.

c. Device is not of a type meeting Department standards.

d. Lamp lens is painted, discolored, missing, or a portion of the lens is missing. Lamp lenses cannot be repaired with repair tape or repair kit.

e. Wiring insulation is worn, rubbed bare, or shows any evidence of burning, short circuiting, or poor electrical connections.

f. Switch is not convenient to driver or indicator light does not operate. Selector switch must lock in proper turn position when applied but need not cancel automatically.

g. Signal shows any color other than amber to front, or signal shows any color other than red or amber to the rear.

h. Signal does not flash or is not operating properly.

i. Signal is not clearly visible to the front and to the rear of the vehicle for the required distance. LED lights have less than 50% of diodes illuminated.

j. Lens is cracked.

k. Any lamp assembly is cracked allowing water to enter or the lamp assembly contains standing water.

l. Lamps are not of equal intensity.

15.26 Vehicle Identification Number (VIN)

Vehicle Identification Number, Motor, or Serial Number: Make an actual physical check of the motor block, frame, or body part where such number is located and record same on the vehicle inspection report. The entire vehicle identification number must be used. Do not reject a vehicle because it has no vehicle identification number or motor or serial number.

Vehicles with altered or removed vehicle identification numbers or motor or serial numbers should be reported to your Department representative.

15.27 Wheels and Rims

1. Inspection Procedure. The inspection of all wheels and rims will be visual. Spare wheels and rims will not be inspected. Wheel covers or hubcaps may be removed from the vehicle if the certified inspector has probable cause or reason to believe that wheel or rim defects exist.

2. Inspect for and reject if:

a. Any loose, missing, broken, cracked, stripped, damaged or otherwise ineffective wheel studs, bolts, nuts, or lugs.

b. Any part of the wheel is bent, cracked, or damaged so as to affect safe operation of the vehicle.

c. Wheel nuts, studs, and clamps which are loose, broken, missing, or mismatched. Adequate thread engagement is imperative. Stud and nut threads on wheel lugs must engage completely through the entire threaded portion of the nut.

d. Lock or side rings which are bent, broken, cracked, improperly seated, sprung or mismatched ring(s) or otherwise damaged. Check for evidence of rim slippage - this is an indication of wear or loose nuts.

e. Disc wheels with elongated bolts, holes, or cracks between hand holes or stud holes, or both.

f. Cast wheels with cracks, evidence of wear in the clamp area, or both.

g. Rims have defects or cracks to the extent that they impair the safe mounting and proper retention of tires.

h. Any wheel cannot be securely fastened to the hub of the vehicle.

i. Welds

1. Any cracks in welds attaching disc wheel disc to rim.

2. Any crack in welds attaching tubeless demountable rim to adapter.

3. Any welded repair on aluminum wheel(s) on a steering axle.

4. Any welded repair other than disc to rim attachment on steel disc wheel(s) mounted on the steering axle.

j. On motorcycles and motor-driven cycles, any spokes are bent, loose, broken, or missing.

15.28 Window Tinting or Coating

1. Inspection Procedure. Utilize calibrated tint meter to check window tinting or coating.

2. Inspect for and reject if: (All year models)

a. Coloring or tinting of windshields if the light transmittance through the colored or tinted glazing is less than 70% of the normal light transmittance. The measurement for light transmittance should not be taken in the 2 inch border at the top of the windshield, a 1 inch border at each side of the windshield, or in the area below the topmost portion of the steering wheel. Check tint meter calibration before rejecting vehicle.

b. Windows, immediately to the right and left of the driver, have less than 70% light transmittance. Check tint meter calibration before rejecting vehicle.

c. Tinting is red, blue, or amber in color or is a reflective type.

d. Vehicles with windows immediately to the right or left of the driver that cannot be raised or lowered for inspection of the window tint.

15.29 Windshield

Windshield damage should not be assessed in the 2 inch border at the top of the windshield, a 1 inch border at each side of the windshield, or in the area below the topmost portion of the steering wheel.

1. Inspect for and reject if:

a. Any crack over ¼ inch wide.

b. Any damaged area of larger than ¾ inch diameter.

c. Any damaged area of ¾ inch diameter if closer than 3 inches to any other similarly damaged area.

d. Any crack less than ¼ inch wide intersecting with any other crack.

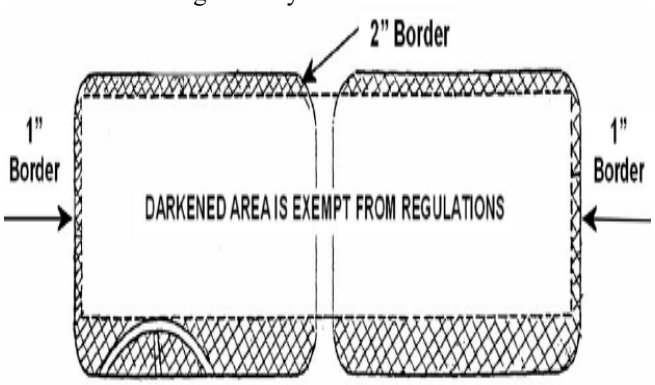

15.30 Windshield Wipers

Every motor vehicle with a windshield must be equipped with a windshield wiper or wipers adequate for cleaning rain, snow, or other moisture from the windshield; in good working order; and constructed so as to permit operation and control by the driver of the vehicle.

All motor vehicles which were originally equipped (manufactured) with one wiper, only one wiper is required; if originally equipped (manufactured) with two or more wipers, all wipers will be required. Replacement of vacuum with electric or electric with vacuum wipers is permissible.

1. Inspection Procedure. Inspect for satisfactory operation. If vacuum operated, engine must be idling and control full on. Inspect for proper contact of blades with windshield. Raise arm away from windshield and release. Arm should return to original position and wiper blade should contact the windshield firmly. The rear window is not considered a windshield and any wiper present on the rear window is not an item of inspection.

2. Inspect for and reject if:

a. Vehicle is not equipped with the number of wipers with which it was originally equipped.

b. Wiper is inoperative, does not operate freely, or is improperly adjusted.

c. Wiper blades have damaged, hardened, or badly worn rubber elements.

d. The portion of the rubber element that contacts the windshield is torn more than one inch on one end or is torn a total of one inch on both ends.

e. Any part of the rubber element is torn loose from the metal backing or blade base.

f. Metal parts of wiper blades or arms are damaged or come in contact with the windshield.

g. Wiper is incapable of adequately cleaning the windshield.

h. Wiper blades are not making proper contact with windshield.

i. Wiper controls are not operating properly or are located beyond the driver's reach.

06.20.00 EXAMPLES OF DEFECTIVE EQUIPMENTONCOMMERCIALVEHICLES

See Annex #5 for some examples of defective equipment frequently encountered during Commercial Motor Vehicle Inspections.