NOSE

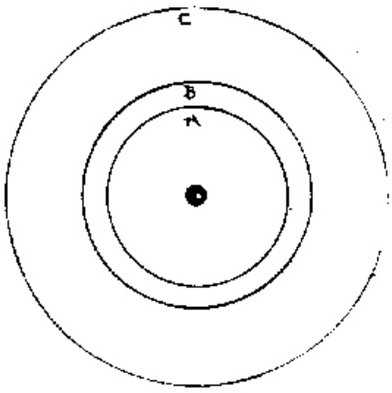

A . 593"

B . 818"

C . 1.598

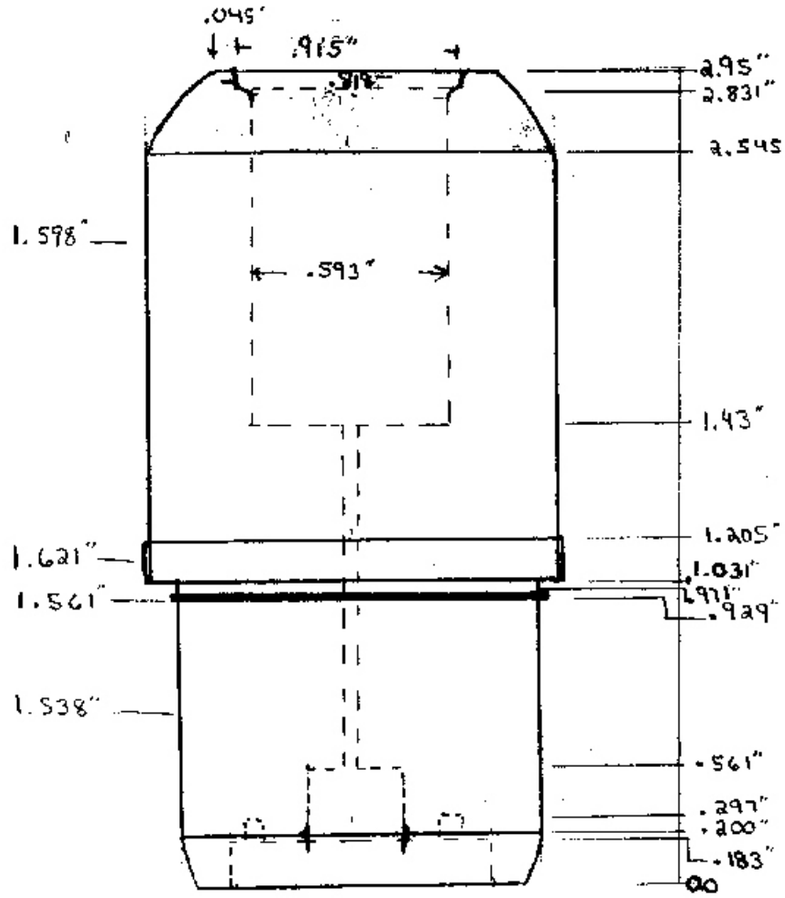

BASE

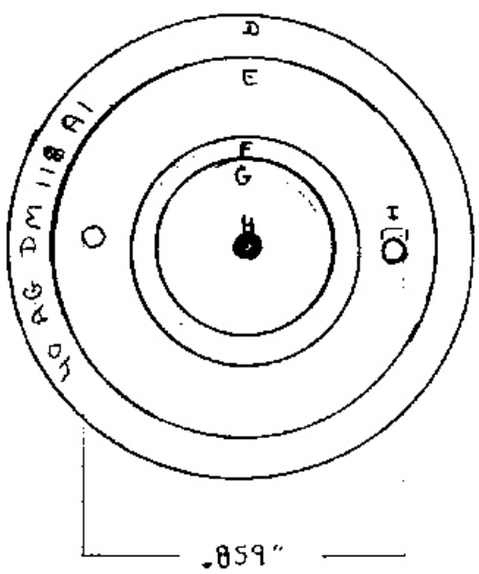

D - 1.538"

E - 1.375

F - .923

G - .451

H - .120

I - .1

Q380