Texas Public Safety Broadband Program

LTE 101 & 201 Technical Overview for Public Safety Communications Staff

August 29, 2013

Todd M. Early
Statewide Interoperability Coordinator (SWIC)
Deputy Assistant Director, Law Enforcement Support Division
Texas Department of Public Safety

Mike Barney
Technical Services Coordinator
LTE Chief Engineer
Texas Department of Public Safety

LTE 101

Todd Early

Texas' Road to PS LTE

Harris County Hurricane Evacuation

What is Public Safety Broadband

An LTE ***mobile data network*** that will be built for the express use of Public Safety:

EMS, Law Enforcement, Fire, Emergency Management <u>& more</u>

Public Safety LTE Goal:

Provide public safety responders with the RIGHT INFORMATION in REAL-TIME to save lives and property.

North Texas Tornadoes 2013

What is Public Safety Broadband?

- Exclusive for Public Safety
  - Middle Class Tax Relief and Jobs Creation Act of 2012
  - Band Class 14
  - Implemented nationally by FirstNet, a national organization under the NTIA and FCC and working in coordination with the Dept of Homeland Security
- Ubiquitous Interoperability
  - Federal, State, local and tribal responders
- Self-sustaining funding model
  - $2 - 7 Billion initial funding
  - Allowed users will buy access from NPSBN instead of carriers
- Data network based on the 3GPP LTE standard that commercial carriers currently use…but different!

PS LTE will equip responders with real time data to do their jobs better and more efficiently through….

- Government "App Stores"
- Coordinated response tools
  - GPS tracking, mapping tools
  - ICS forms on handheld
  - Shared applications
- Real Time video
- Facial recognition
- Field reporting / Database queries
- Infrastructure information (i.e. blueprints)
- Public works
- Transportation
- Child welfare
- Education

Texas Wildland Fires

Comal County Floods

Potential Hazards

- Hurricane
- Tornado
- Flood/Flash Flood
- Winter Storm
- Power Outage
- Water Outage
- Wildfire
- Mass Fatality
- HazMat or Chemical
- Terrorist Act
- Civil Disturbance
- Earthquake
- Oil Spill
- Economic Loss
- Communications
- Urban Fire
- Building Collapse
- Subsidence
- Utility Outages
- Drought
- Disease
- Rail Accident

TEXAS DEPARTMENT OF PUBLIC SAFETY
DIVISION OF EMERGENCY MANAGEMENT

Amarillo Ice Storms

Fertilizer Plant Explosion, West, Texas

Texas Public Safety Broadband Program

Disaster Declarations

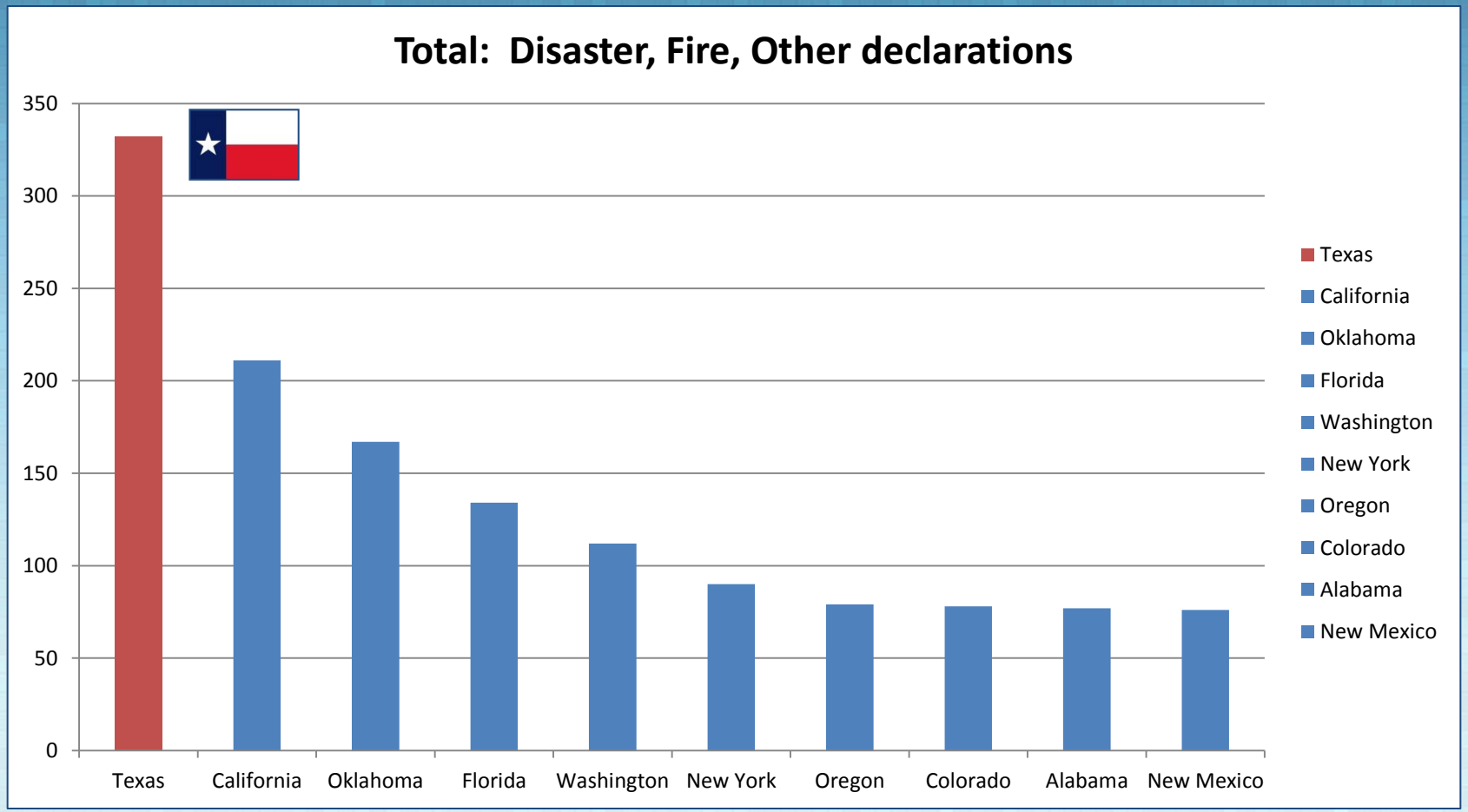

FirstNet Historical Development

- 2006 – Public Safety Broadband Network Concept
- 2007 – Public/Private Concept Developed
  - FCC
  - Public Safety Spectrum Trust
- 2008 – Failed Auction
- 2009 – Public Safety Community Organizes
  - Public Safety Alliance
- 2012 – FirstNet Created
  - Middle Class Tax Relief and Job Creation Act of 2012
  - FirstNet Public Safety Broadband Network (PSBN)

Texas PS LTE Background

- Harris County began planning for PS LTE in 2009
- Funded system efforts through Port Security grant program and local contributions
- Texas was one of the initial 21 waivers issued by FCC
- In partnership with Harris County ITC, the State aggressively pursued authorization to operate
- Texas is operating under Special Temporary Authority (STA) from the FCC, and hopes to have a Spectrum Management Lease Agreement (SMLA) signed soon

Represents original waiver entities

It is happening NOW!

Harris County, Texas

- 14 PS LTE E-Node-B sites completed
- Additional sites ready for installation pending frequencies
- Baytown Police and Fire <u>live</u> on the system today

Jurisdictions in varying stages of PS LTE:

City of Pasadena
City of Webster
City of Houston
Harris County
Port of Houston Authority
All of Brazoria County
…and others

Rural Texas Needs

- The Harris County System is just the beginning…
  - Covers 0.6% of the State of Texas

- Though we have three of the largest metropolitan areas in the US, Texas is over 85% rural
- Agriculture and food production is a top industry in Texas and susceptible to a wide range of disasters
  - Agriculture accounts for 1 in every 7 job in the state
- Distance adds time to rural health and law enforcement response so the need for communications is critical

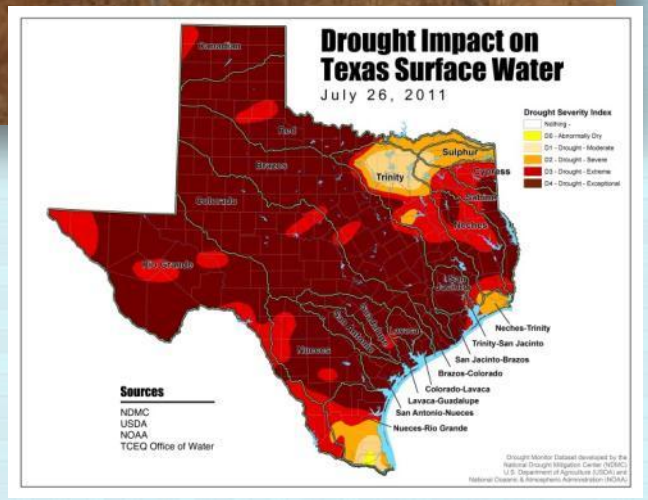

Texas is Preparing for LTE:
But we need your help!

- Establish Stakeholders and state advisory group
- Establish Outreach & Education Program

Sign up to receive information concerning the Texas Public Safety Broadband Network (TxPSBN): http://www.dps.texas.gov/LTE

Tell your co-workers and friends to sign-up too!

West Fertilizer Plant 2013

Harris County - Baytown

- Demonstration:
  - Baytown PD: Discussion with officers using devices everyday
  - Patrol boats: Visit to sites along port, viewing video from other users
  - Command Vehicles: Viewing all participants
  - Helicopter downlinks: Video from helicopter linked to Lex devices, etc.

College Station – Disaster City

Scenario #1 – Collapsed Building

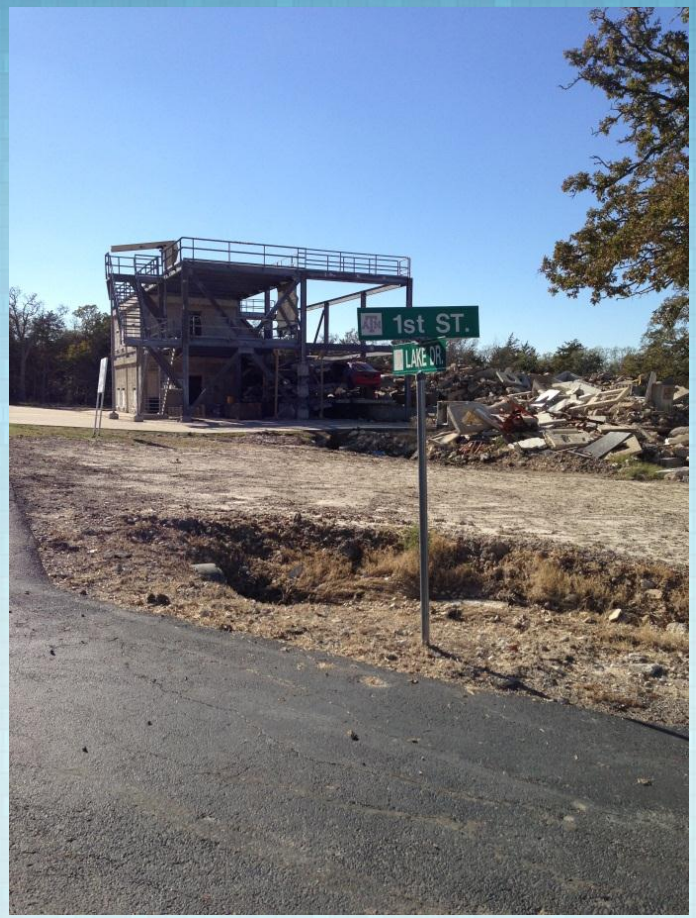

- Collapsed building with victims trapped in the rubble
- Search & Rescue, EMS, and Hospital
- In-car video of scene
- Search and Rescue Team
- Floor plan of collapsed building

Search and Rescue

- Live surveillance camera showing Search & Rescue
- Rubble Camera showing condition of victim trapped in the collapsed building

EMS - Transport

- Video conference between EMS in the ambulance and the ER Doctor at the local Hospital

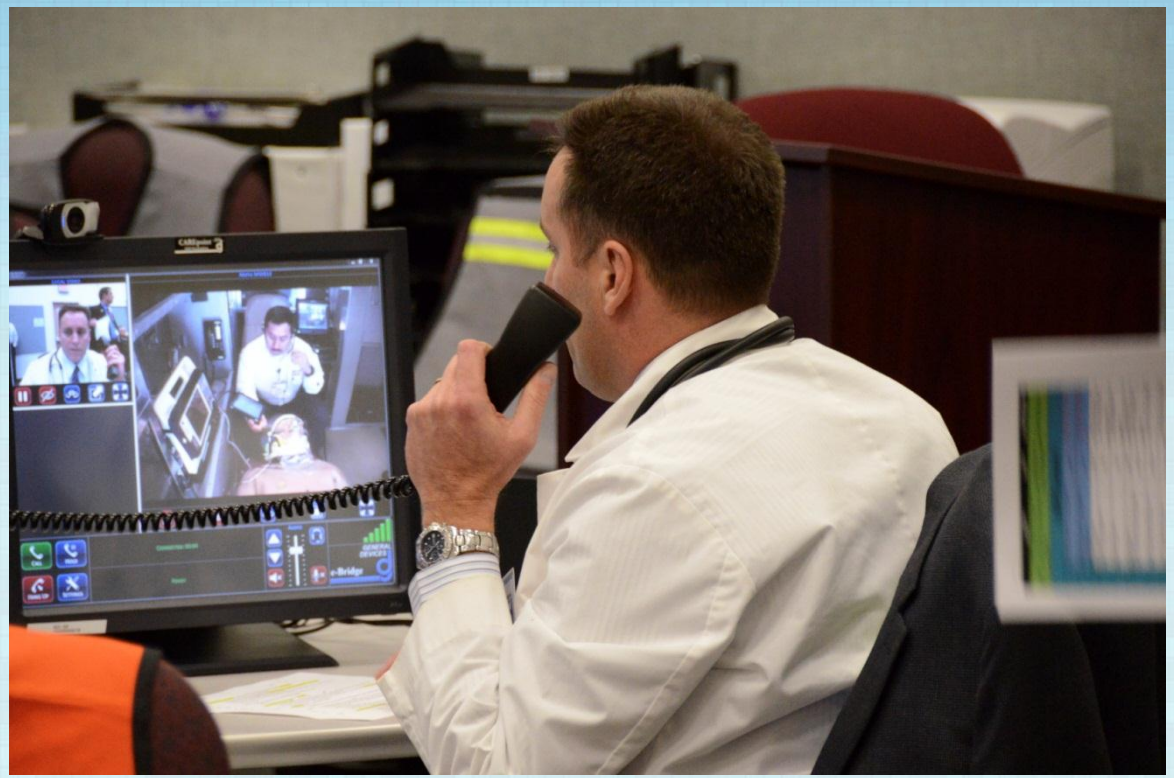

Scenario #2 – Suspicious Package

- A suspicious package was reported

Disciplines involved:

- Bomb Squad
- Off-site Bomb SME

Live Video Telconference:
IC, Bomb Squad & FBI Bomb Expert

Suspicious Package: Live video from Bomb Robot

Scenario #3 – Active Shooter

An active shooter was reported by a citizen inside a local theater

- Citizen was able to text a picture of the suspect to 9-1-1

- Video from inside the theater was accessed

Active Shooter

- A pre-arranged agreement between city and theater owner - allowed access to video from inside the theater

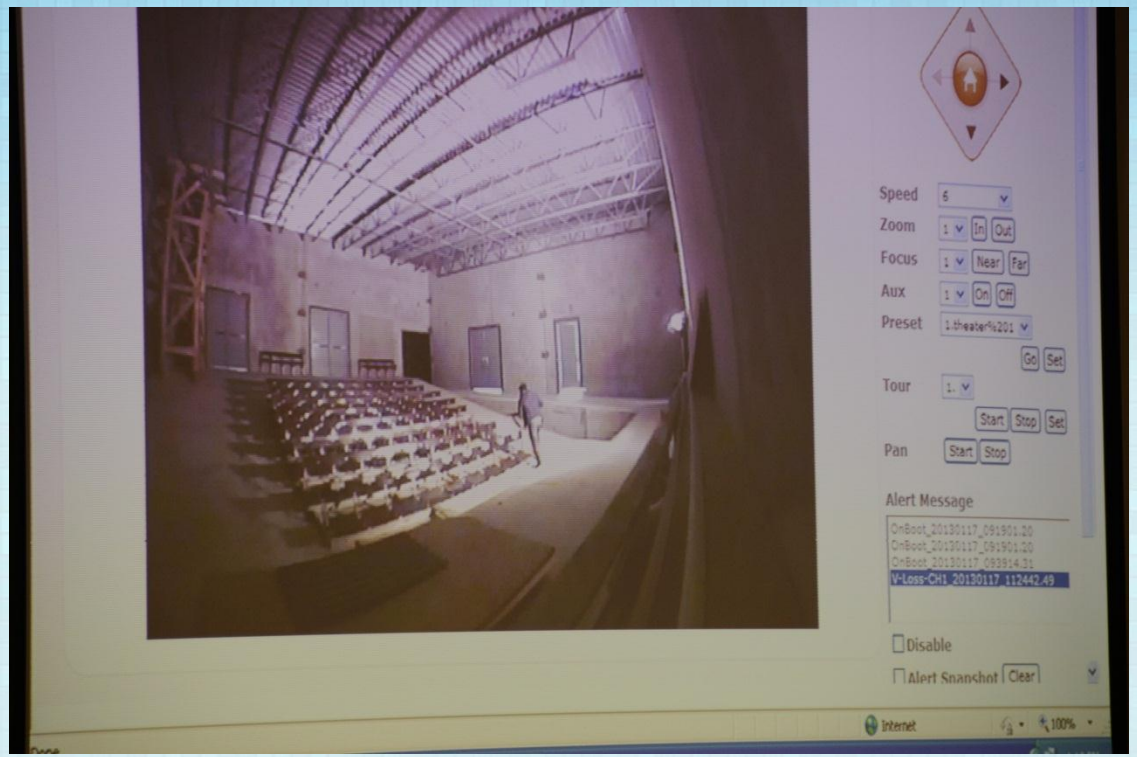

Active Shooter

- Live surveillance camera access of suspect being captured

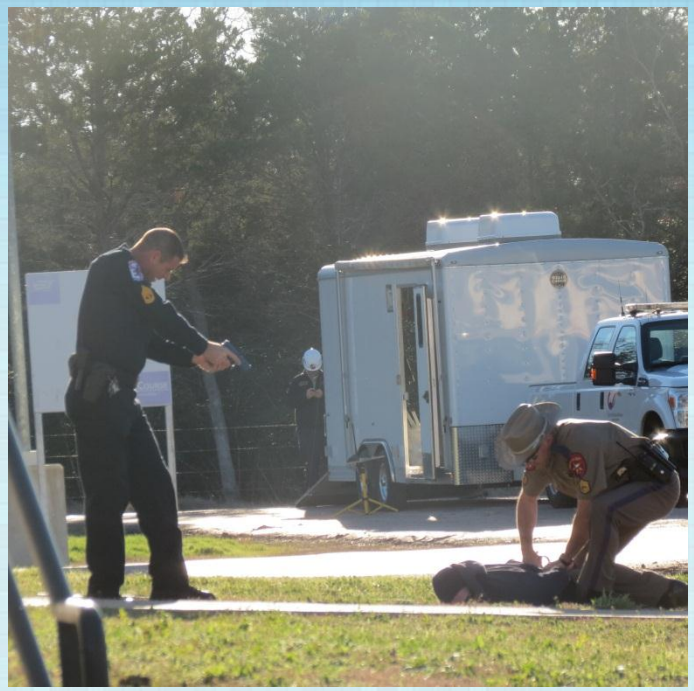

Texas Statistics

- User Type Statistics
  - Total Jurisdictions: **1,462** **(1,208 cities; 254 counties)**
  - Total Disciplines = **5,916**
    - **2,649 law enforcement agencies**
    - **2,167 fire departments including volunteer**
    - **1,100 EMS agencies**
  - Total First Responders = **214,418**
    - **74,681 certified peace officers**
    - **78,000 firefighters (est)**
    - **61,737 EMT / Paramedics**
- User Density & Mobility Statistics
  - Population/Users per Service Areas
    - **261,226 square miles**
    - **1,254 miles of international border**

North Texas Tornadoes

May 15, 2013

North Texas Tornadoes

May 15, 2013

18 Tornadoes across North Texas resulting in **6** deaths and dozens of injuries. **277** homes sustained major damage or were destroyed, **629** homes received minor damage.

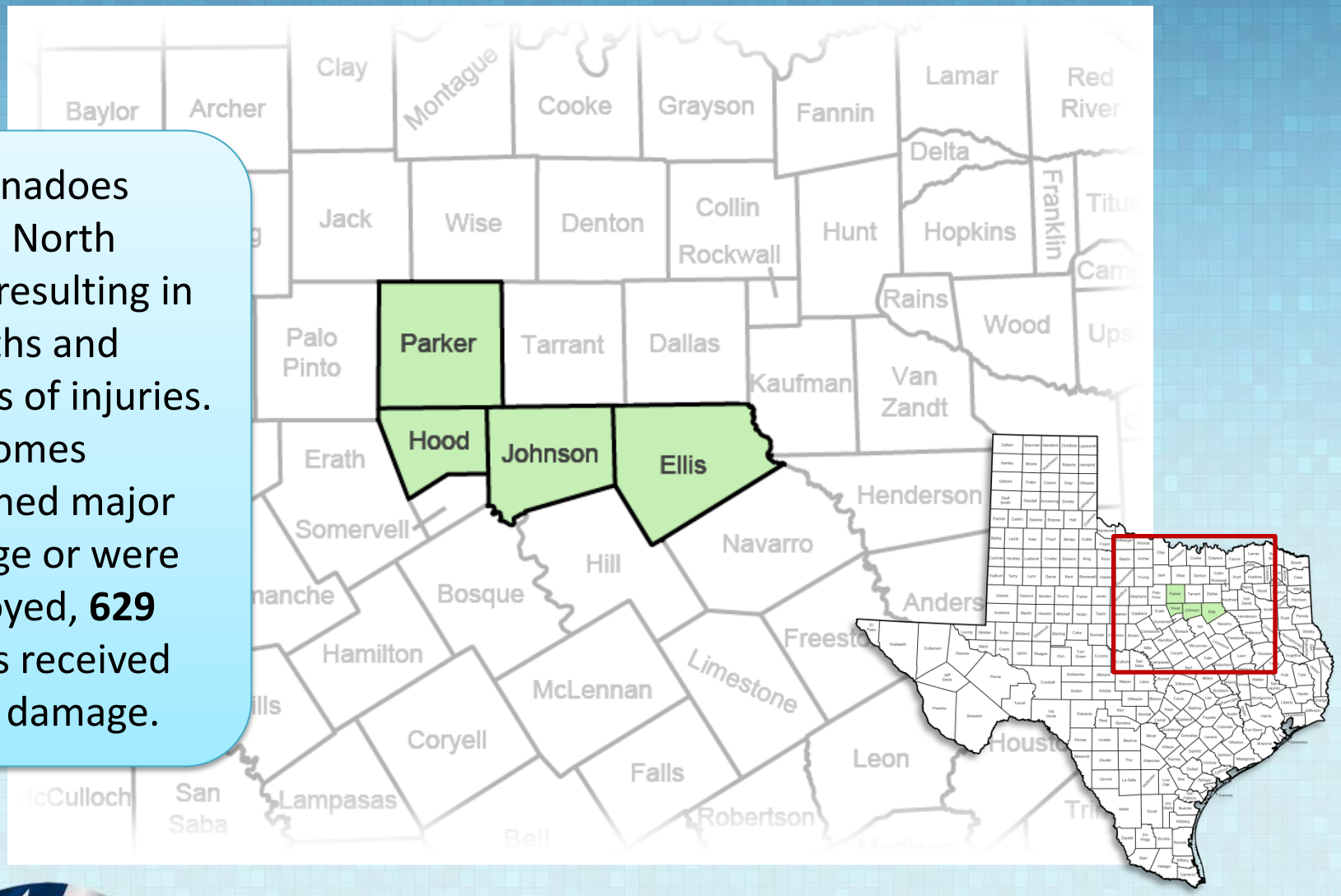

North Texas Tornadoes

May 15, 2013

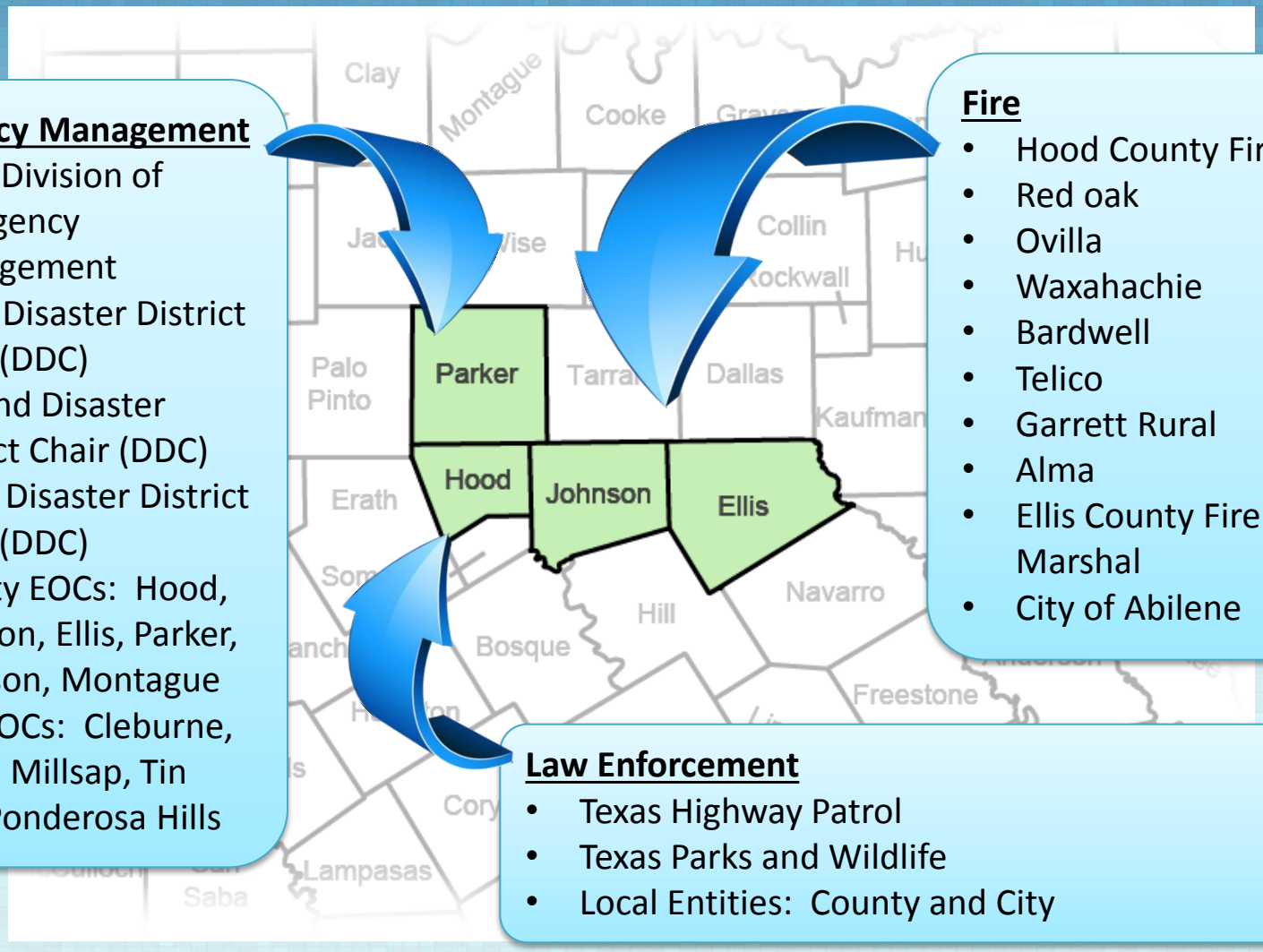

Emergency Management

- Texas Division of Emergency Management
- Hurst Disaster District Chair (DDC)
- Garland Disaster District Chair (DDC)
- Waco Disaster District Chair (DDC)
- County EOCs: Hood, Johnson, Ellis, Parker, Harrison, Montague
- City EOCs: Cleburne, Ennis, Millsap, Tin Top, Ponderosa Hills

Fire

- Hood County Fire
- Red oak
- Ovilla
- Waxahachie
- Bardwell
- Telico
- Garrett Rural
- Alma
- Ellis County Fire Marshal
- City of Abilene

Law Enforcement

- Texas Highway Patrol
- Texas Parks and Wildlife
- Local Entities: County and City

North Texas Tornadoes

May 15, 2013

EMS
- East Texas Medical Center

Search and Rescue
- Texas Task Force Two

Environmental
- Texas Commission on Environmental Quality (TCEQ)
- Texas A&M Forest Service
- Municipal Water Districts: Nolan River estates, Granbury Industrial Park, Rancho Brazos, Action MUD

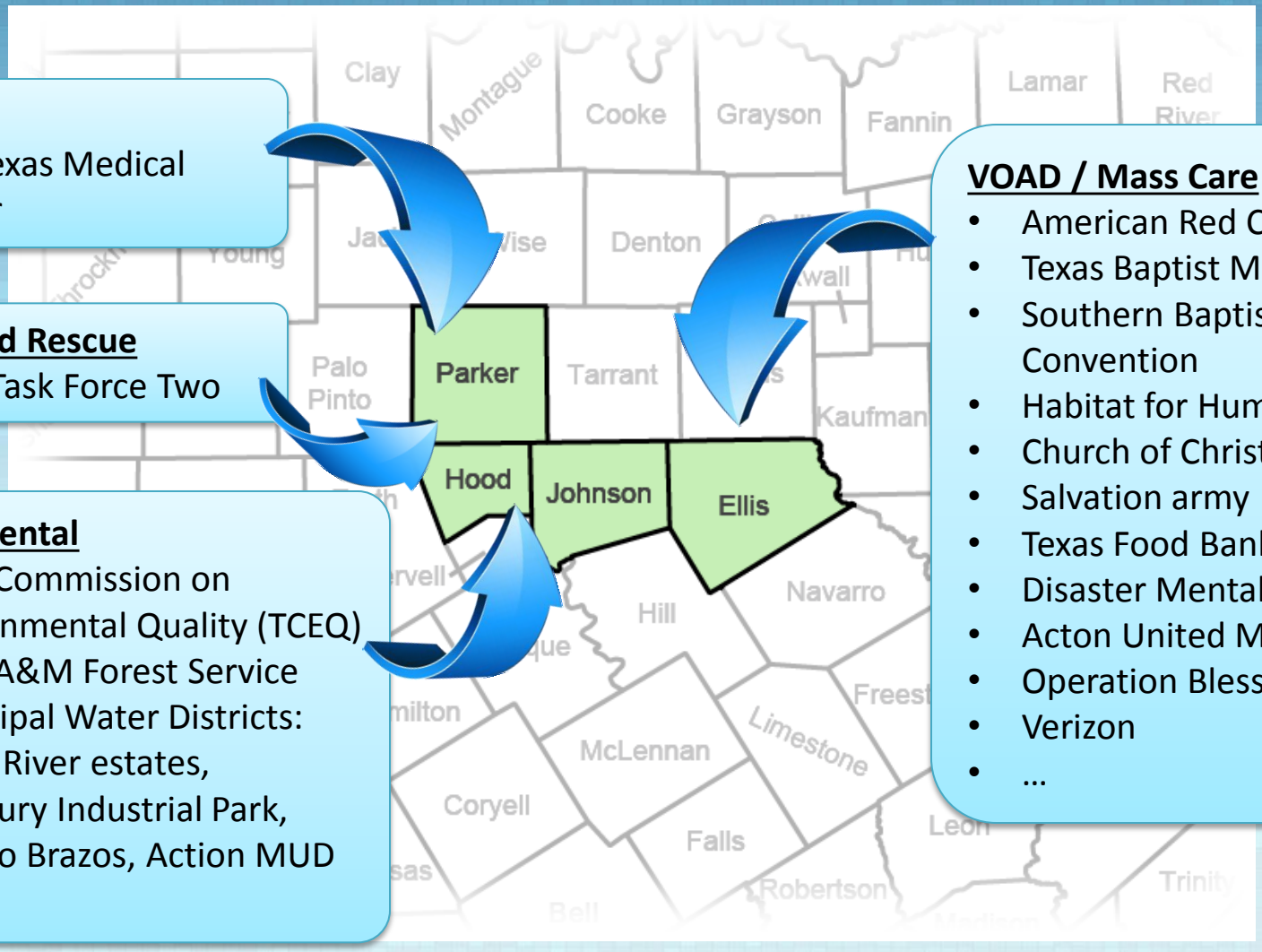

VOAD / Mass Care
- American Red Cross
- Texas Baptist Men
- Southern Baptist Texas Convention
- Habitat for Humanity
- Church of Christ
- Salvation army
- Texas Food Bank
- Disaster Mental Health
- Acton United Methodists
- Operation Blessing
- Verizon
- …

North Texas Tornadoes

May 15, 2013

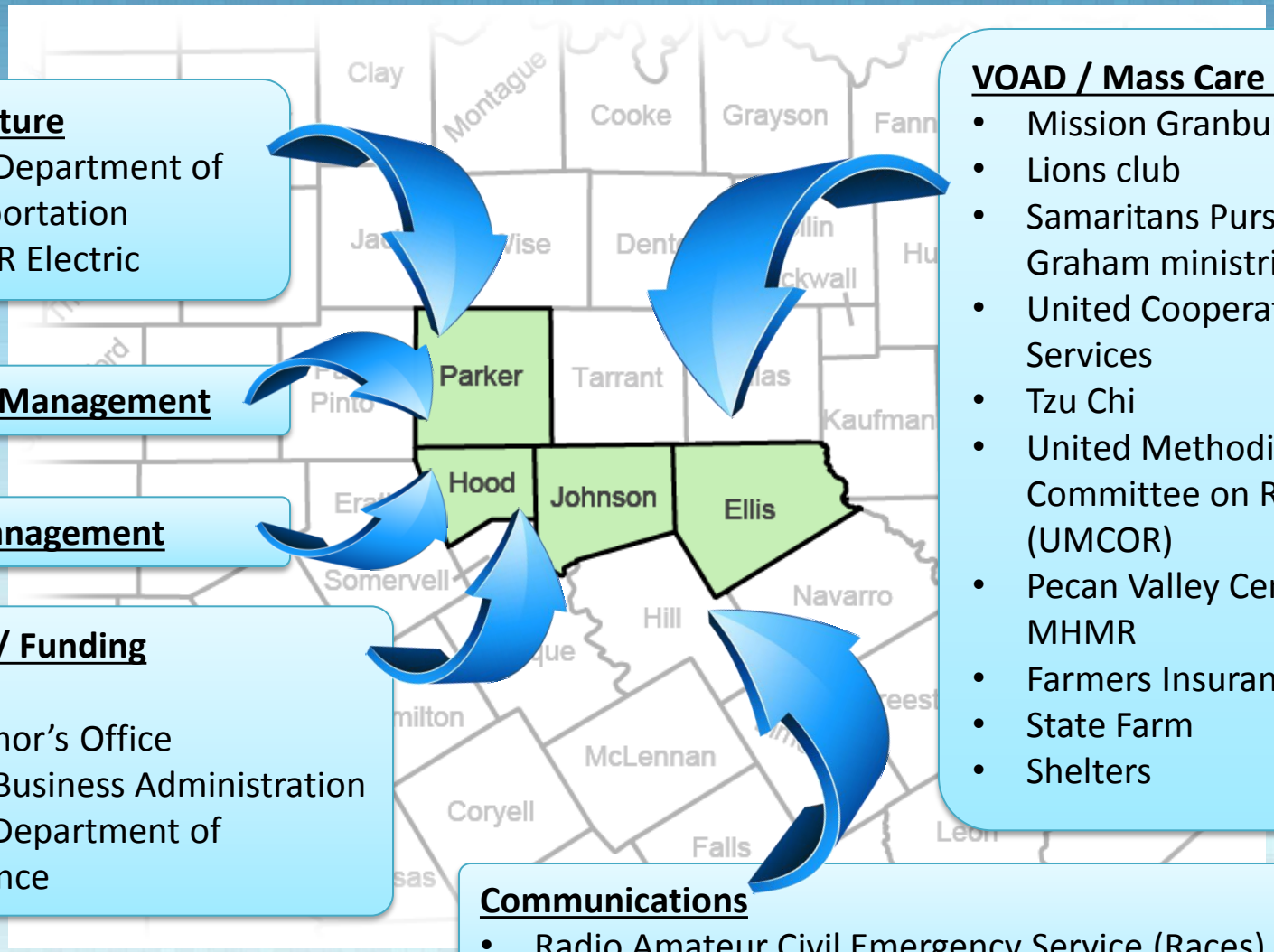

Infrastructure
- Texas Department of Transportation
- ONCOR Electric

Donation Management

Debris Management

Financial / Funding
- FEMA
- Governor's Office
- Small Business Administration
- Texas Department of Insurance

VOAD / Mass Care (cont'd)
- Mission Granbury
- Lions club
- Samaritans Purse, Bill Graham ministries
- United Cooperative Services
- Tzu Chi
- United Methodist Committee on Relief (UMCOR)
- Pecan Valley Center MHMR
- Farmers Insurance
- State Farm
- Shelters

Communications
- Radio Amateur Civil Emergency Service (Races)
- Local Entities: County and City

North Texas Tornadoes

May 15, 2013

Over **50** agencies and organizations, and **hundreds** of first and secondary responders arrived to help in the aftermath of these storms.

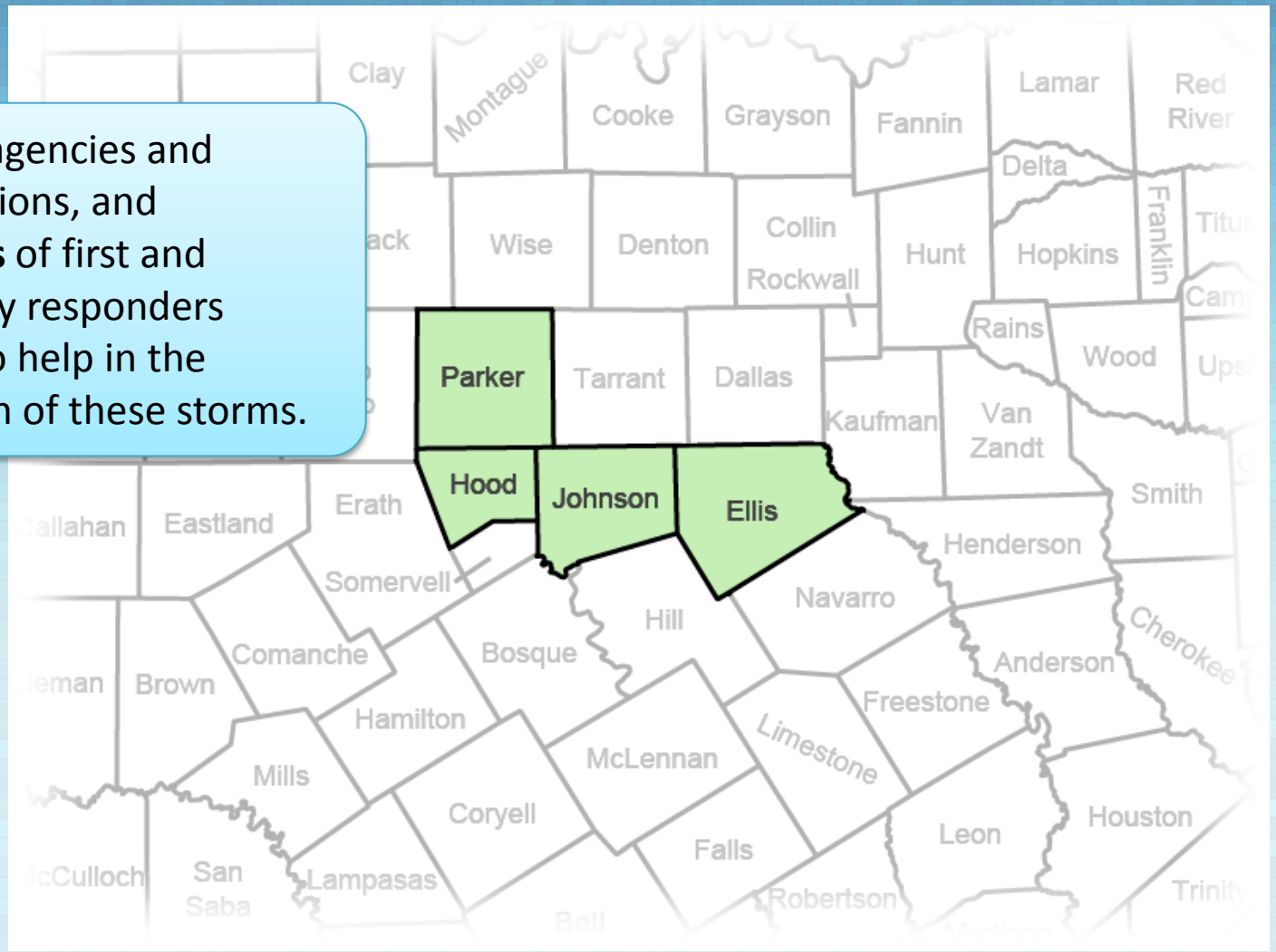

Texas Public Safety Broadband Program

North Texas Tornadoes

May 15, 2013

Over **50** agencies and organizations, and **hundreds** of first and secondary responders arrived to help in the aftermath of these storms.

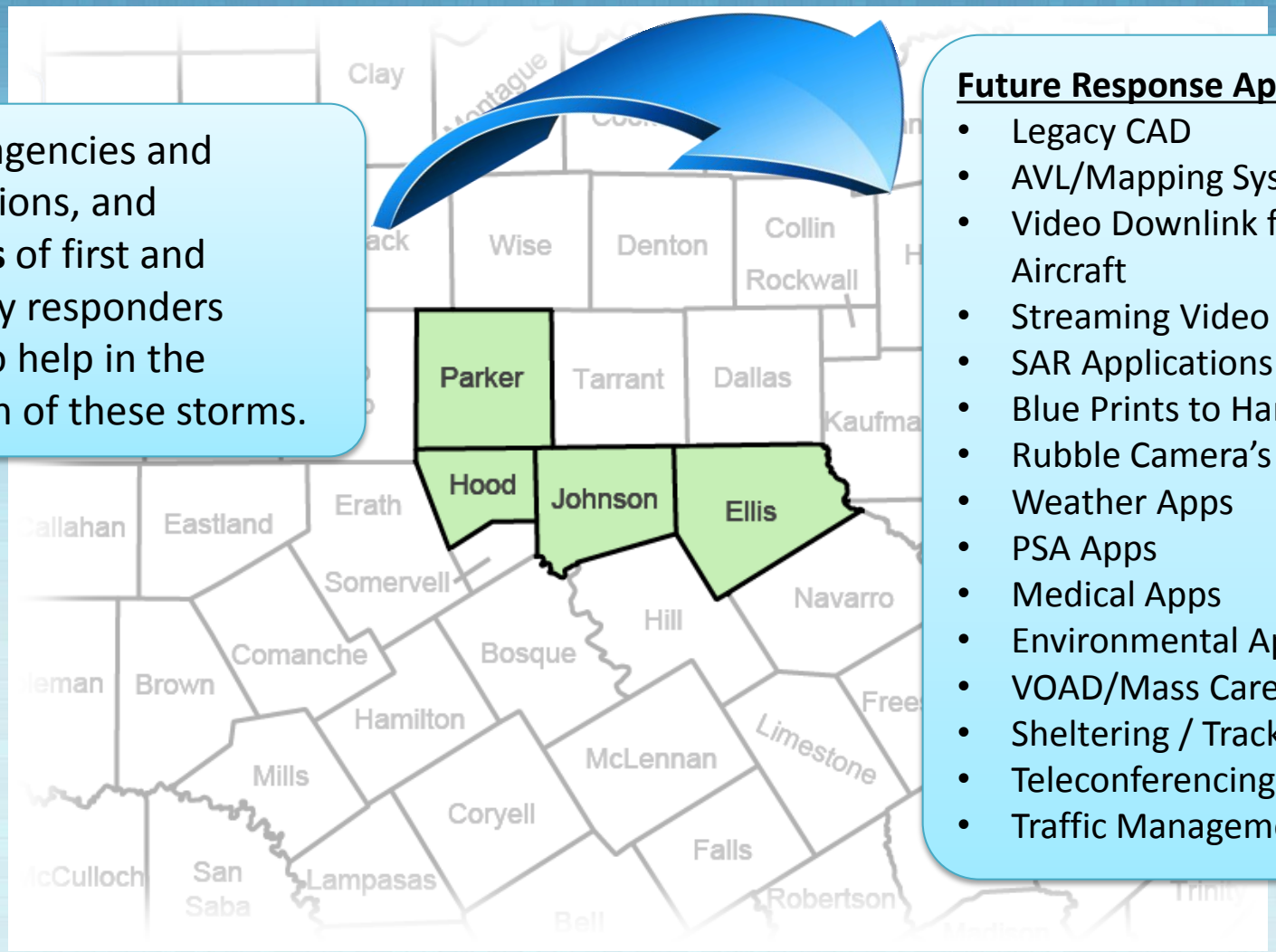

Future Response Applications:

- Legacy CAD
- AVL/Mapping Systems
- Video Downlink from Aircraft
- Streaming Video
- SAR Applications
- Blue Prints to Handhelds
- Rubble Camera's
- Weather Apps
- PSA Apps
- Medical Apps
- Environmental Apps
- VOAD/Mass Care Apps
- Sheltering / Tracking Apps
- Teleconferencing Apps
- Traffic Management (M2M)

North Texas Tornadoes

May 15, 2013

Over **50** agencies and organizations, and **hundreds** of first and secondary responders arrived to help in the aftermath of these storms.

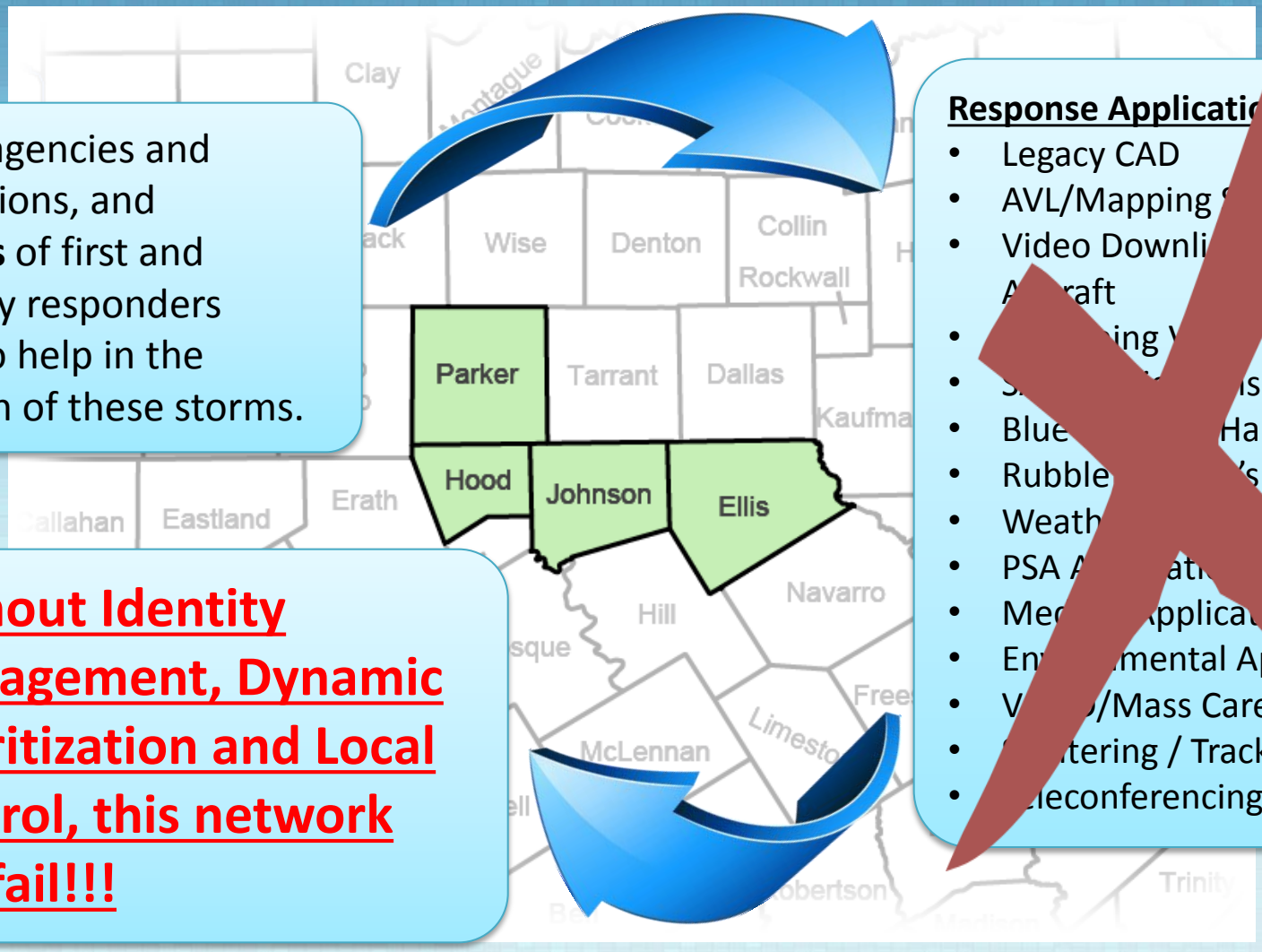

Response Applicati

- Legacy CAD
- AVL/Mapping S s
- Video Downli m
  A raft
- ing V
- S s
- Blue Handhelds
- Rubble 's
- Weath ons
- PSA A ati
- Med pplica
- En mental App ns
- V /Mass Care Apps
- tering / Tracking Apps
- leconferencing Apps

Without Identity Management, Dynamic Prioritization and Local Control, this network will fail!!!

Texas Public Safety Broadband Program

LTE 201

Mike Barney

Comparison Of LTE To LMR (Caution urged!)

What is the difference between current Public Safety radio systems and the FirstNet Broadband Network? (Hint: There are MORE differences than similarities)

- Current Public Safety Communications
  - All agencies have Land Mobile Radio (LMR) systems
    - Interoperability at state and/or local level – <u>not National level</u>
  - Most agencies have a Data System
    - Private narrowband or wideband systems
    - Commercial broadband data cards – Verizon, AT&T, Sprint
    - Little interoperability
- With Addition of FirstNet Broadband Network
  - <u>Nationwide, fully interoperable</u> BB communication system
  - But, all agencies will still have LMR systems for foreseeable future

What additional capabilities will be available with the NPSBN?

Examples Capabilities	LMR	Current Data Systems*	LTE
Public safety-grade handsets	●		●
Push-to-Talk	●		◉
Unit-to-Unit Communications (Direct Mode)	●		◉
One-to-Many Communications	●		●
Priority Access Capabilities	●	◐	●
Text Messaging	◐	●	●
Computer Aided Dispatch (CAD) Interface		●	●
Automatic Vehicle Location (AVL)	◐	●	●
Field Reporting		●	●
Mobile Geographic Information Systems (GIS) Access		●	●
E-mail and Internet Access		●	●
File Transfer (e.g., photographs, AFIS)		●	●
Streaming Video			●

● Current Capability

◐ Limited Capability

◉ Anticipated/Underdevelopment Capability

*Current Data Systems include both private and commercial data systems

Mission Critical Requirements

One to Many	~500ms group communications setup, low latency
Network Resiliency	Site & zone trunking, failsoft, IP path re-routing
Mission Critical Devices	High velocity, ruggedized, environment, accessories
Direct Mode	Subscriber continuity, out-of-network coverage
Dispatch	Console control & interrupt, agency partitioning
Coverage	95%+ guaranteed geographic coverage, in-building
Interoperability	LMR networks, legacy applications & services
Emergency	Subscriber ID, location, remote monitor, pre-emption
Priority	Individual, group, jurisdictional, agency, voice
Security	E2E encryption, key management, access control

LMR

Available Today

LTE

Standards evolution
3GPP, TIA, OMA

Feature development
R&D Investment

Feature rollout
Test, trial, & deploy

LMR will continue to provide Mission Critical communications for the foreseeable future!

LMR uses a single channel per user or Talk Group
LTE uses the entire bandwidth for all applications

LMR BS

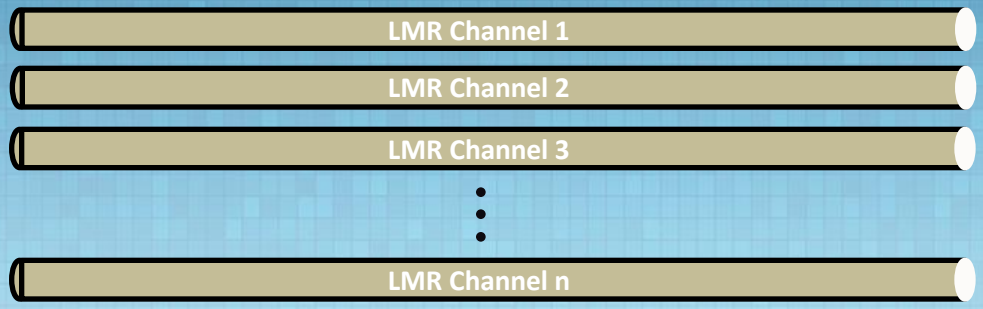

All 12.5 KHz Narrowband Channels

LTE eNB

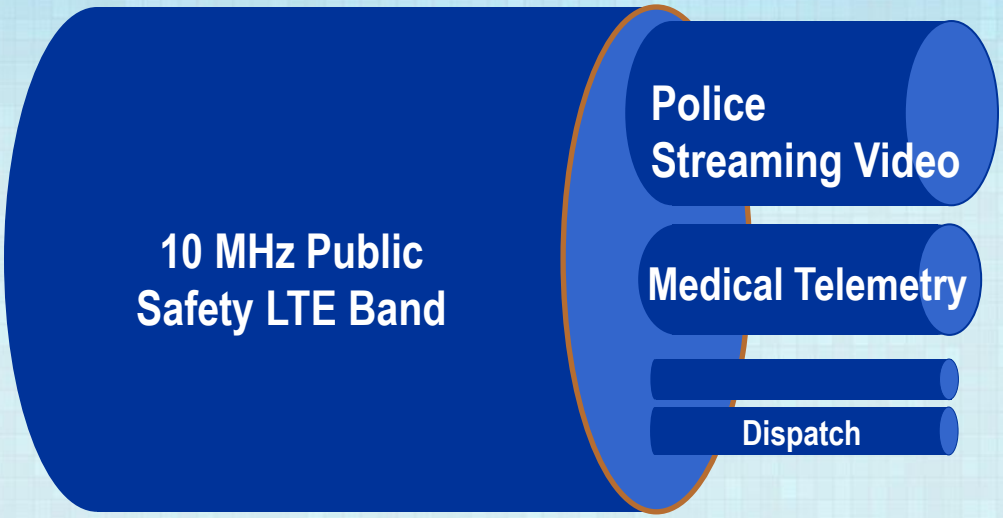

Variable Data Rate per User – 1 to 100 Simultaneous Users

Can LTE leverage existing wireless sites?

- LMR Antennas are placed on Tall Towers, Hills and Mountain Tops
  - Gives wide area coverage
  - Area covered depends on Operating Frequency – VHF, UHF, 700/800MHz
- LTE is "Cellular" Technology
  - 2X to 10X more antenna sites than LMR
  - Sites equally spaced and roughly same height
- An LTE Signal Coverage Analysis is needed to determine best LTE tower locations
- New antenna sites are very expensive, so what are the possibilities?
- LTE sites are typically closer together but much lower heights

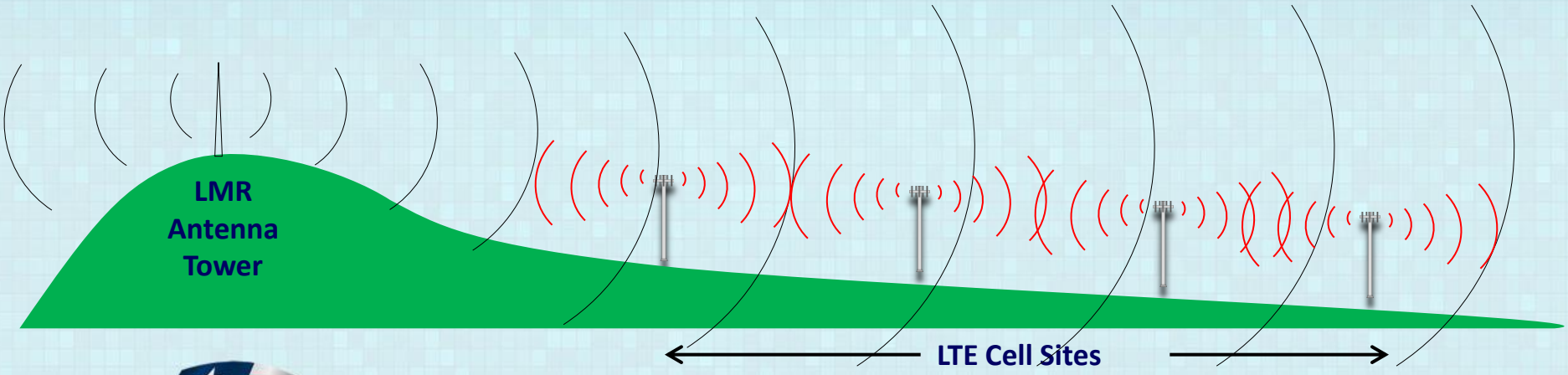

Can site sharing add to potential cost savings for the build-out of the NPSBN?

Commercial Cell Towers

- Verizon, AT&T, Sprint, T-Mobile

Private Networks

- Utilities
- Transmission
- Private EMS

Land Mobile Radio (LMR) Sites

- Owned by State, County, City
- Tall/Municipal Buildings, Hills, Mountain Tops

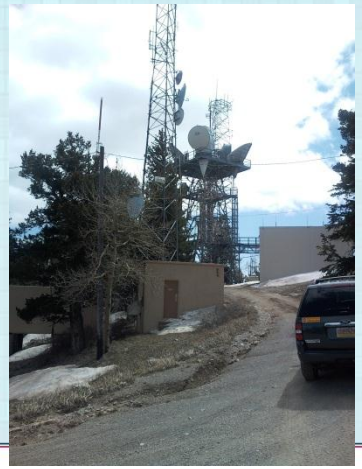

Take-Away's on LTE vs. LMR Coverage

- LTE Will Have More Antenna Sites Than LMR
  - Between 2X to 10X (or more in dense urban) depending on
    - LMR operating frequency vs. LTE 700MHz
    - Number of UEs per cell sector and throughput requirements
- LTE Cell Sites **like to be:**
  - Evenly spaced
  - Roughly same height – relative to each other to help manage interference
  - Connected with serious backhaul
- Terrain, Foliage, Buildings Will Have Significant Impact on Siting
  - Dense Urban vs. Urban vs. Suburban vs. Rural
  - Mountainous vs. Hilly vs. Forested vs. Prairie vs. Buildings
- In-Building Coverage Roughly Same as 700/800MHZ LMR
  - Typically given as 20db lose into building – depending on construction

LTE and 700MHz Spectrum Band Plan

- BC = Band Class, a 3GPP Term for LTE Frequency Bands
  - Public Safety LTE in Band Class 14

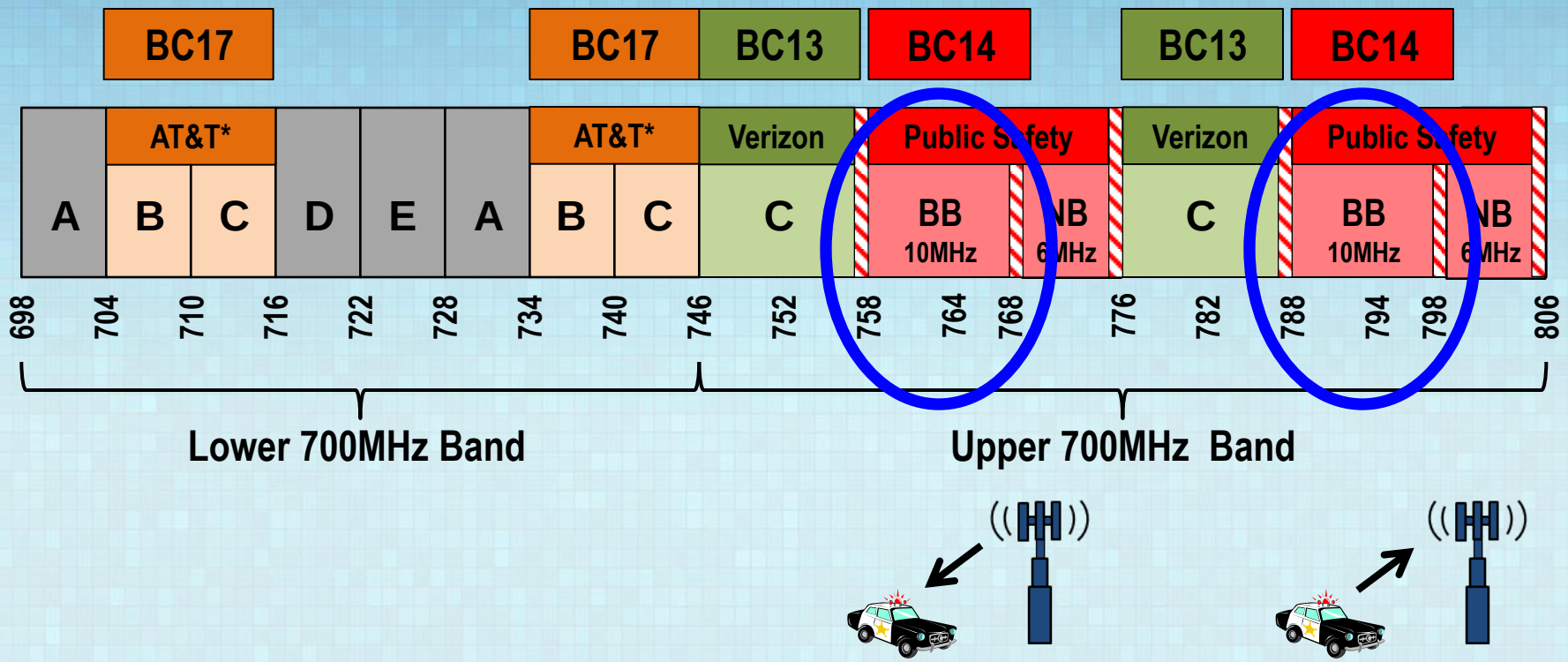

* Small number of Lower B Block licenses held by Regional Carriers.

Important Caveats!

- LTE Developed for Commercial Market ⟶ **Maximize $'s**
  - As many users and throughput as possible
  - Maximize coverage to heavy use areas
  - Improvements/enhancements directed at these objectives
- LTE for Public Safety has **Different Objectives**
  - Coverage "Substantially equal urban and rural"
  - Availability / Reliability "Always there"
  - Interoperability "Any equipment, anywhere"
  - Hardened and Secure "Hacker and Spoofer resistant"
- Must Adapt / Enhance LTE Specifications to Meet PS Needs

THERE IS ONLY 1 Public Safety CHANNEL: it's 10 MHz wide!

Conceptual National Public Safety Broadband Network

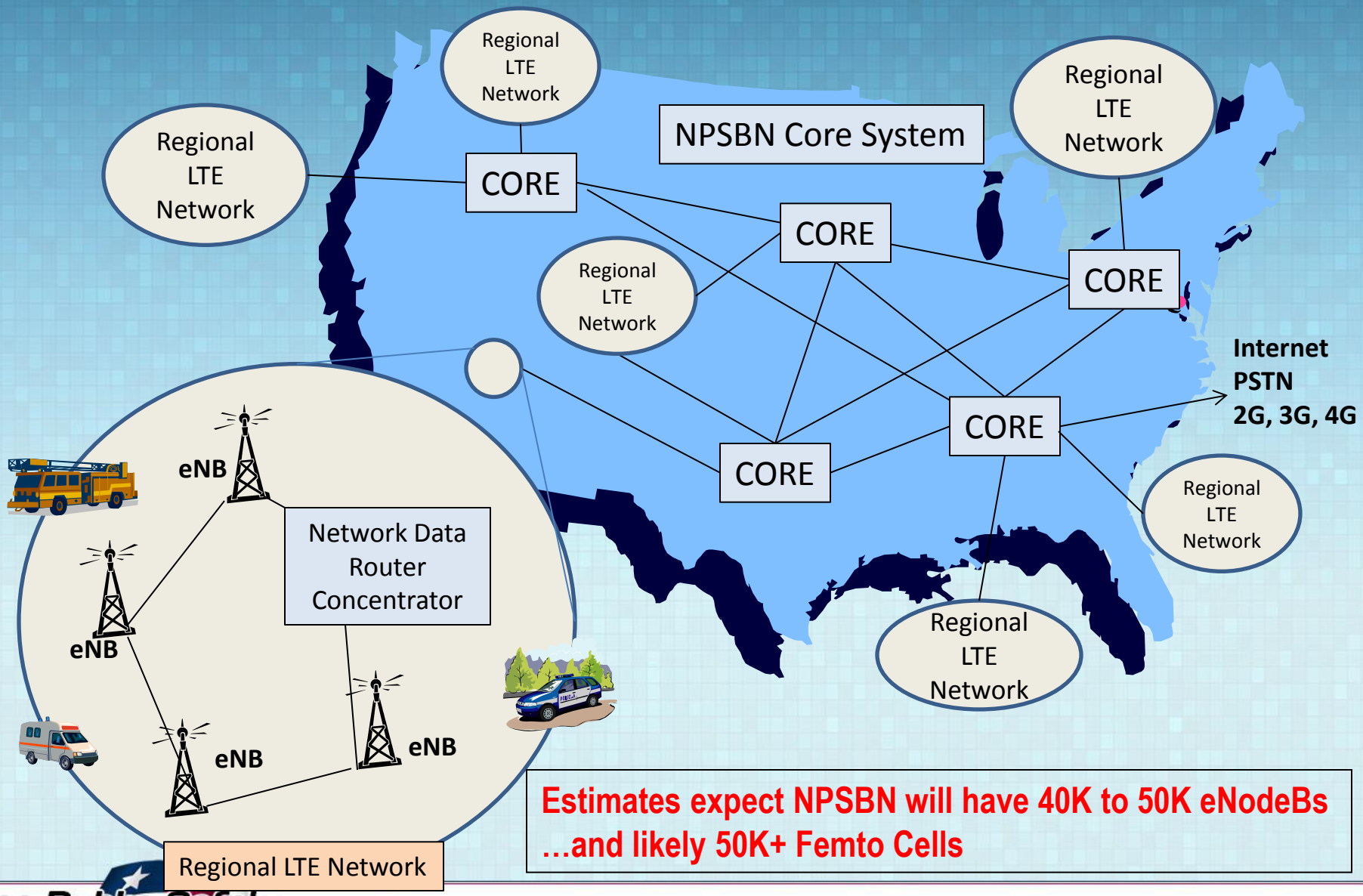

Estimates expect NPSBN will have 40K to 50K eNodeBs ...and likely 50K+ Femto Cells

Basic LTE Architecture

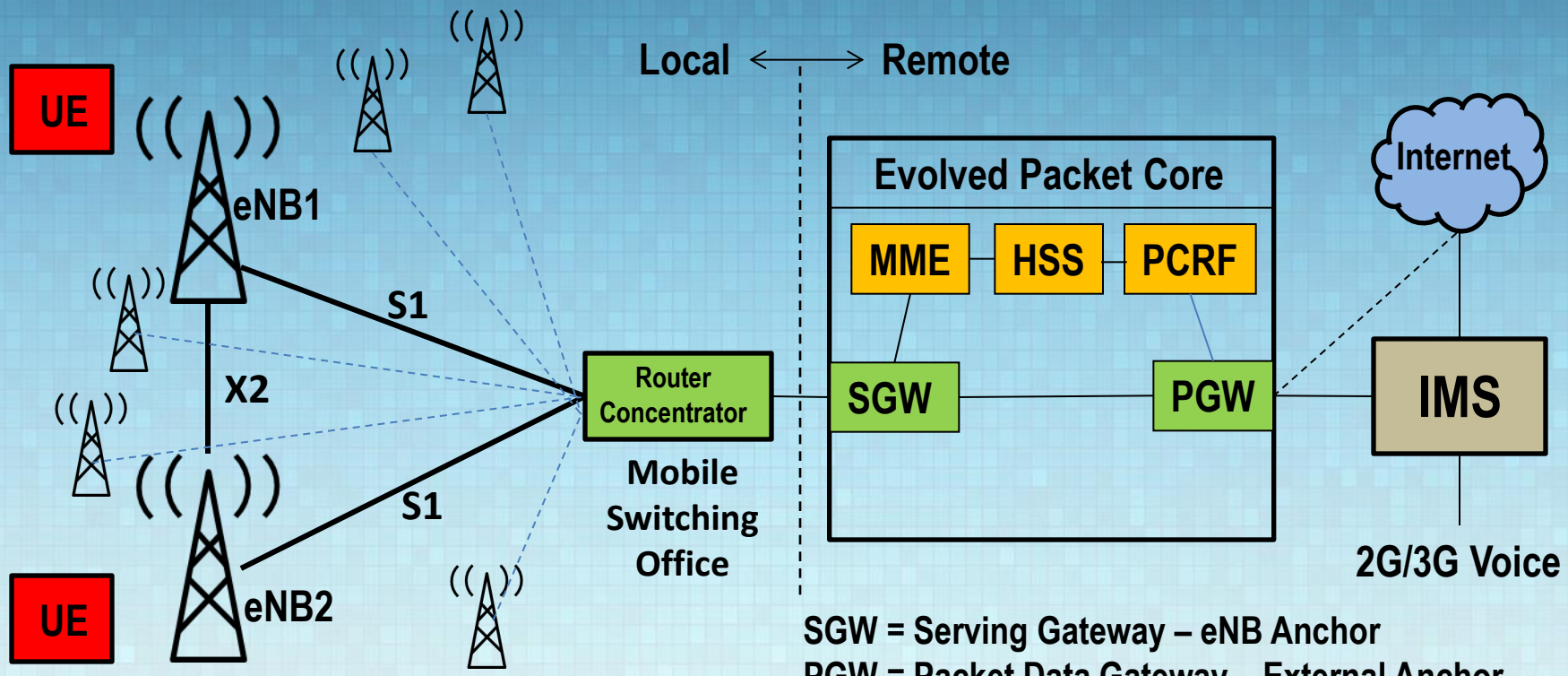

UE = User Equipment (Subscribers)
eNodeB = Antenna Sites
S1 Interface = eNodeB-to-EPC
- S1-U = User Data (User Plane)
- S1-MME = Control Data (Control Plane)

X2 Interface = eNodeB-to-eNodeB

SGW = Serving Gateway – eNB Anchor
PGW = Packet Data Gateway – External Anchor
System Control
- MME = Mobility Management Entity
- HSS = Home Subscriber Server
- PCRF = Policy & Charging Rules Function

IMS = IP Multi-Media Subsystem

LTE Sub-carriers

- **10MHz Public Safety Spectrum -- Divided into 600 15KHz Sub-carriers**

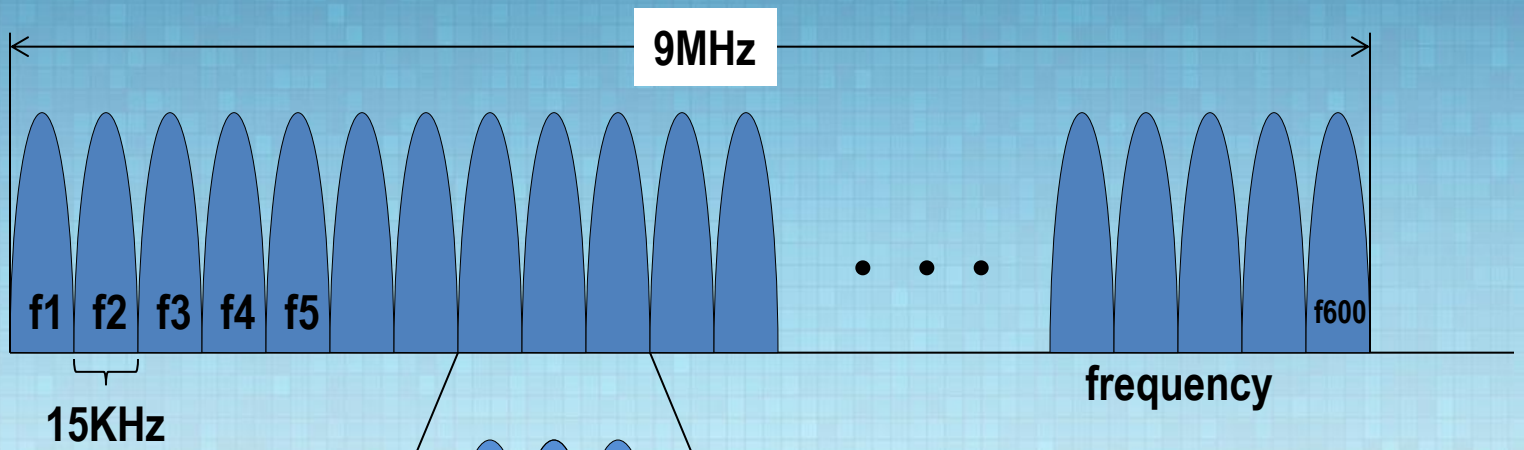

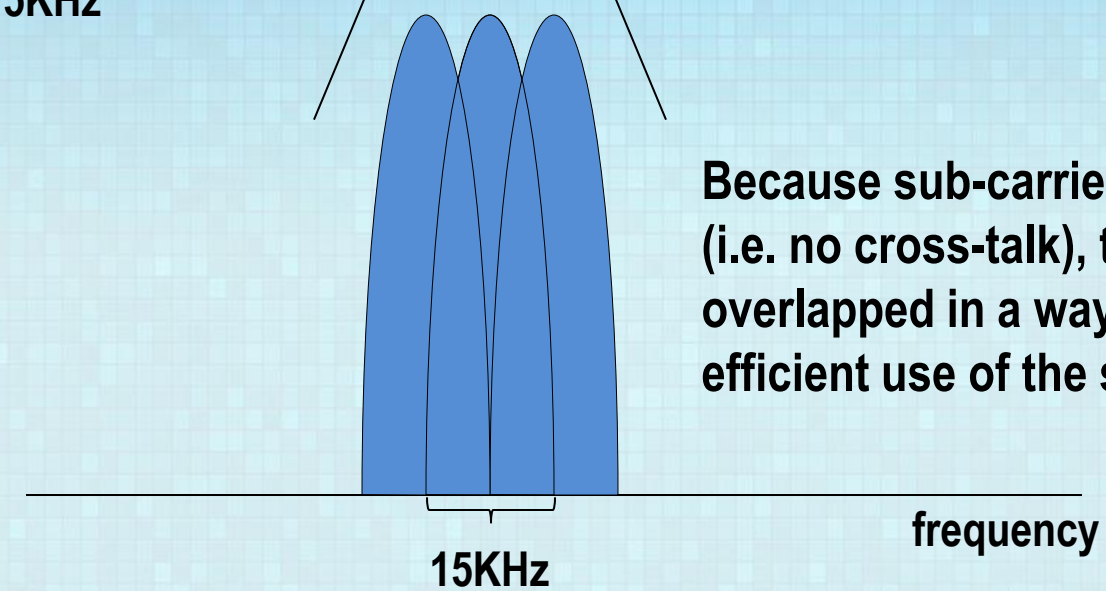

Because sub-carriers are orthogonal (i.e. no cross-talk), they can be overlapped in a way to allow more efficient use of the spectrum

Realistic System Capacity

- Lot's of math and statistics on determining capacity of an eNodeB
- Bottom line:
- ~38Mb/s capacity at the tower vs.

  ~1Mb/s near cell edge

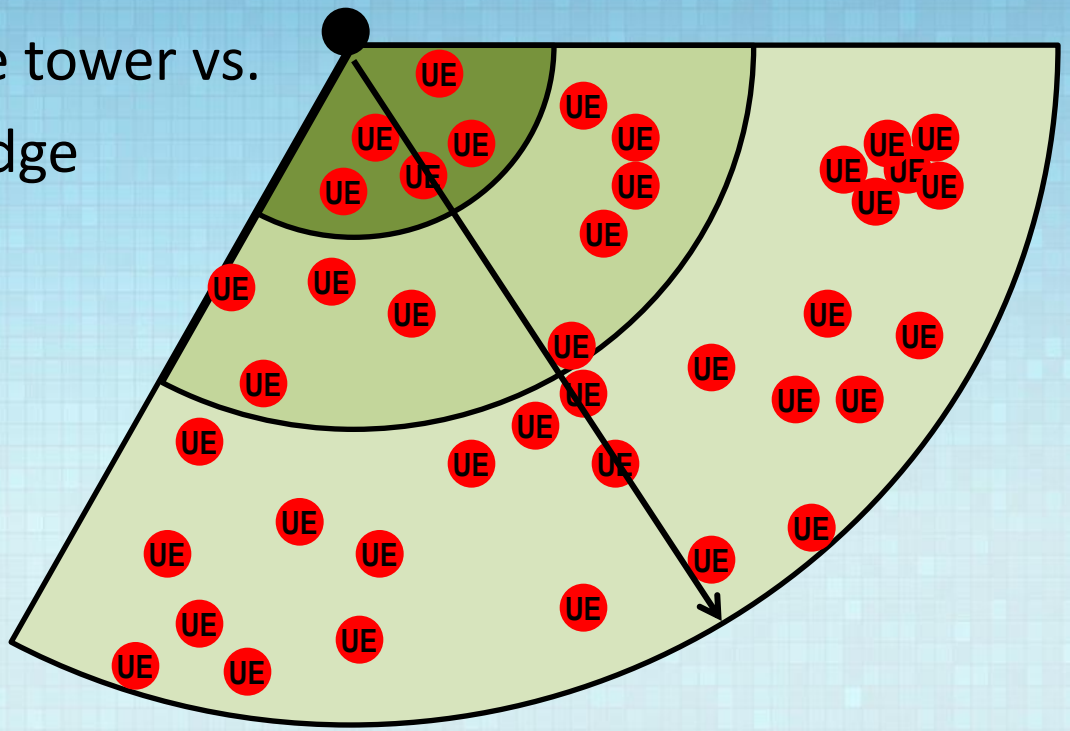

This is Per Sector, nominally 3 per site: Remember you still have to transmit the overhead!

LTE Uses Cellular Architecture with 1 Frequency

- Cells like to be Equally Spaced, Same Height
- 3-Sector Cells Typical – 120º/Sector
- One eNB Controls All Three Sectors

Ideal Cellular Pattern

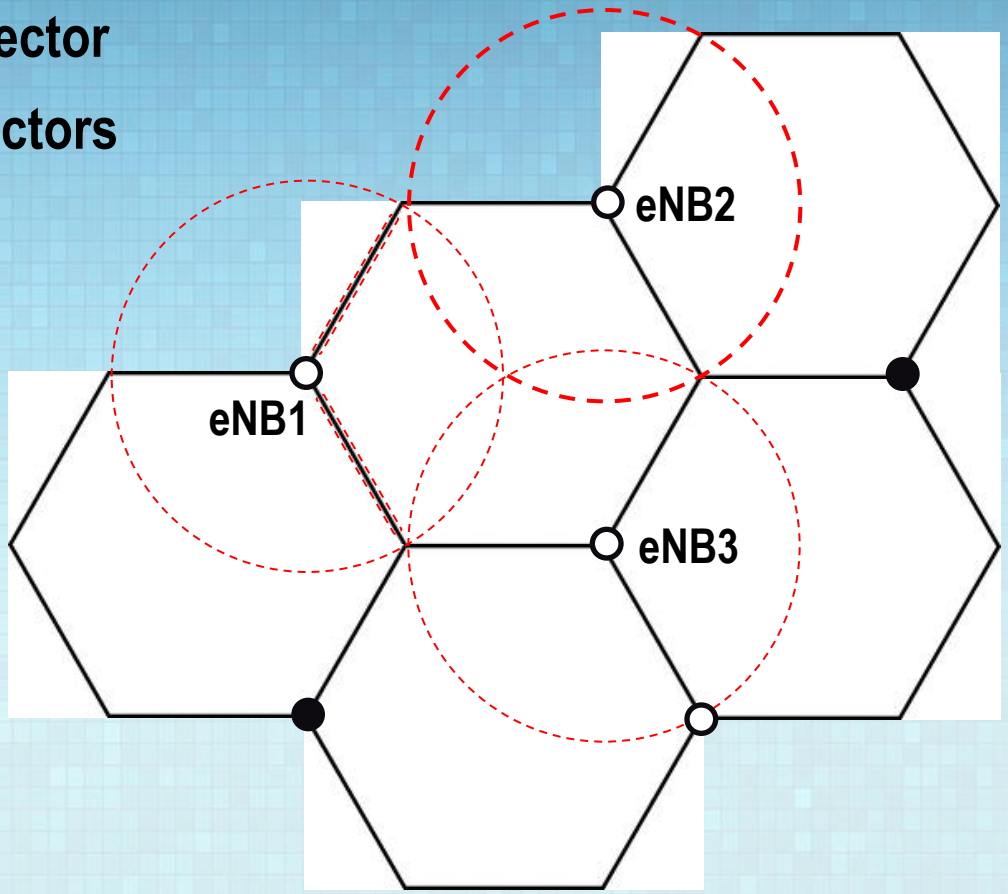

- Contiguous Sectors "Interfere" at Sector Edges and Boundaries
- Interference Includes Inter-Cell and Intra-Cell
- Cities & hills can make layout challenging
- Cell radius is critical
- 0.3 – 30 miles nominal
- 8 miles Standard, 48 miles extended (VERY hard limits)

PS LTE Coverage Issues

- Impacted by Several Factors
  - Operating environment – urban, suburban, rural
  - Cell-edge throughput requirements – down & up
  - Inter- and intra-cell interference
  - Cell loading – how many + their applications
- NIST/PSRC Defining Coverage Assessment Standards
  - Assumptions – for all above
  - Operating scenarios
  - Acceptable modeling tools
- Very Complex, but Essential Design Area
  - Some areas will be easy to cover, others very difficult

Rough Idea of LTE Cell Radius

- For Public Safety 700MHz Waiver Recipients, FCC Set Following Minimum Throughput Requirements
  - Cell edge DL = 768 kbs & UL = 256 kbs
  - All Adjacent cell sectors loaded at 70%
- Following Systems Designed to This Criteria + 95% Prob.
  - Minnesota: Average cell radius ~ 7.3 mi (lots of open spaces)
  - Mississippi: Average cell radius ~ 7.8 mi (lots of open spaces)
  - LA-RICS: Average cell radius ~ 2.5 mi (dense urban area)
  - Adams County, CO: Ave R ~ 4.5 mi (existing tower sites)
- When UEs are Very Near the Antenna
  - Single user DL data rate as high as 50Mb/s (UL = 25Mb/s)
  - As number of users goes up, per user data rate reduces rapidly

Note: Average cell radius is smaller in high usage areas (cities) and larger in low usage areas (rural). Clutter environment (building and trees vs. flat, open space) also has a significant impact on cell density – proportional to radius.

LTE Coverage – UE Comparison

Source: State of Texas Interoperability Showing

Vehicular modem with antennas on exterior - Uplink

USB dongle inside vehicle – Uplink = UE dongle to eNB

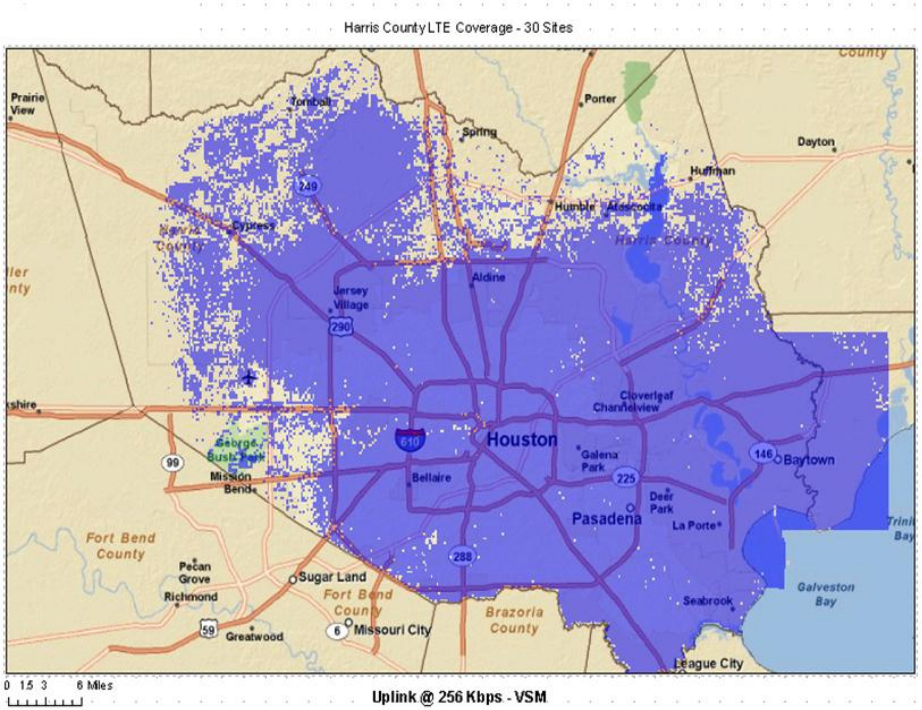

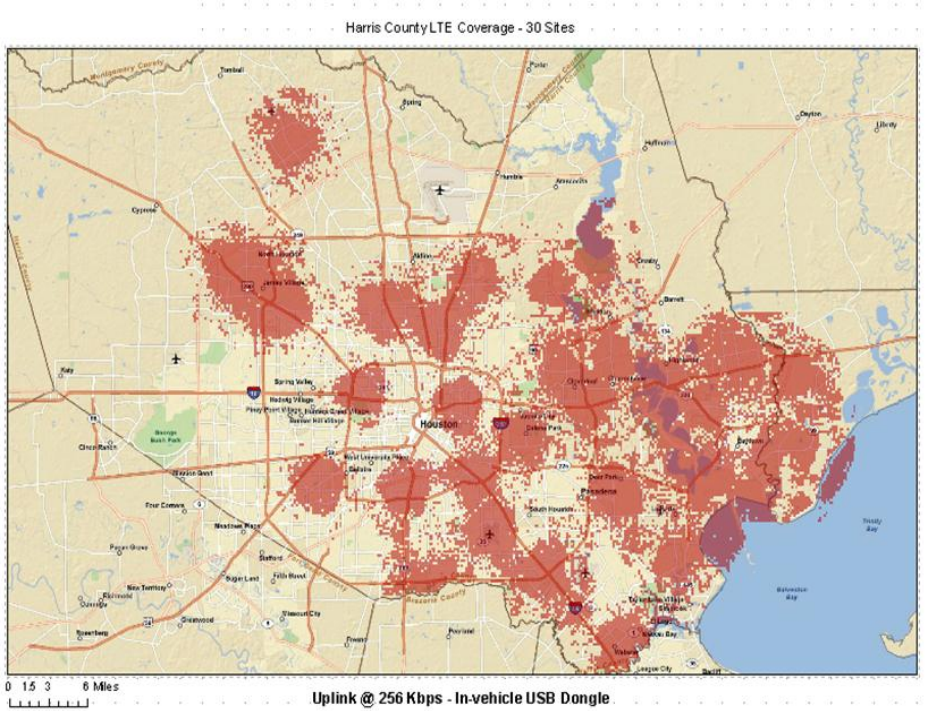

Just as in legacy LMR, type and position of UE will have a large effect on coverage

*Coverage shown is for 30 sites – current deployment is 14

School Playground Analogy of an Evolved Packet Core

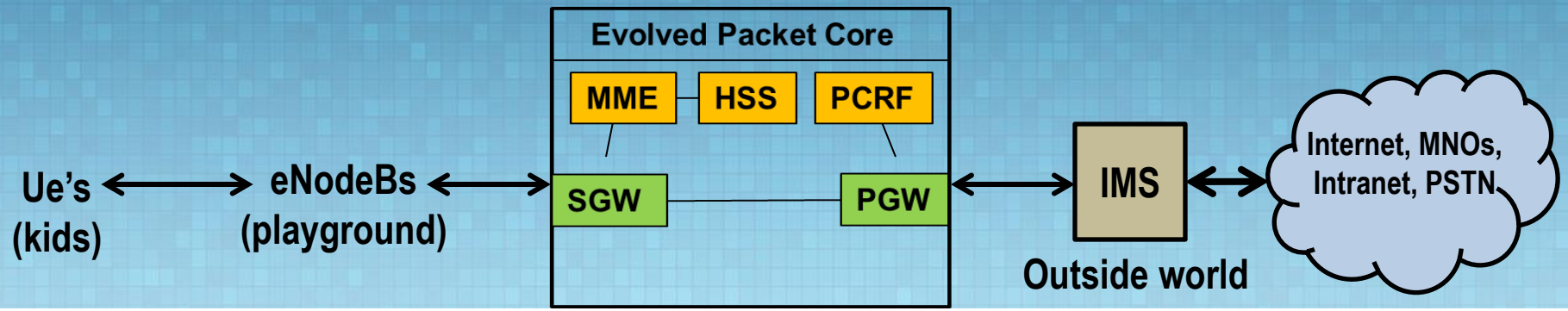

Playground Monitor	Hall/Door Monitor	Admin Office	Principal	Parking lot attendant
Mobility Management Entity	**Serving Gateway**	**Home Subscriber Server**	**Policy & Charging Rules Function**	**Packet Data Network Gateway**
• Watches kids on the playground	• Provides access and watches kids (UE's) coming thru door to playground	• "Your permanent record" keeper • Knows everything about you	• In charge of rules on the playground, hallways, doors and school	• Monitors and controls access to the school from outside

Texas Public Safety Broadband Program

Evolved Packet Core – "Core"

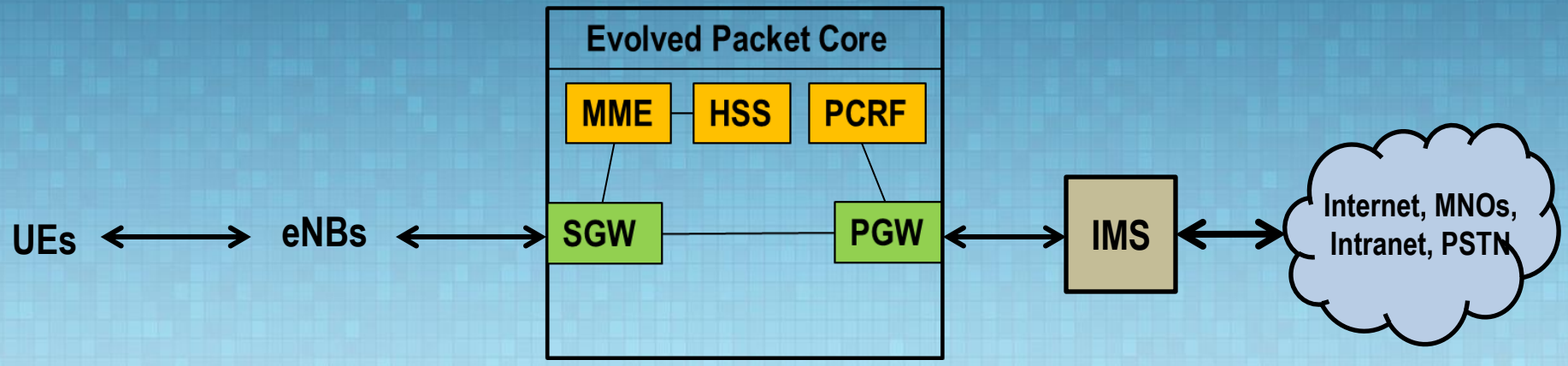

MME	SGW	HSS	PCRF	PGW
Mobility Management Entity	**Serving Gateway**	**Home Subscriber Server**	**Policy & Charging Rules Function**	**Packet Data Network Gateway**
In Charge of all Control Plane Functions • UE Tracking • UE Resources • Mobility Mgmt • Security	Mobility Anchor Point • Router for all eNB Traffic	Database for • User ID • User Profile • User Authentication • Path Integrity	Policy Decisions • Allowed QoS • Packet Data Profile • UE Charges	Packet Network Anchor Point • Route all outgoing & incoming packet traffic • IMS interface • Deep Packet Inspection

Harris County BIG-Net Overview

Broadband Interoperability Gateway Network (BIG-Net)

- Distributed EPC components for operational efficiencies
- BIG-NET Vehicular-based system using Vehicle Subscriber Modem (VSM)
- Port of Houston area cameras
- EPC connected to Harris County PSAN
- EPC connected TxWARN
  - P25 to LTE PTT service
- Initial applications include:
  - video, PTT, database inquiries, and intranet access

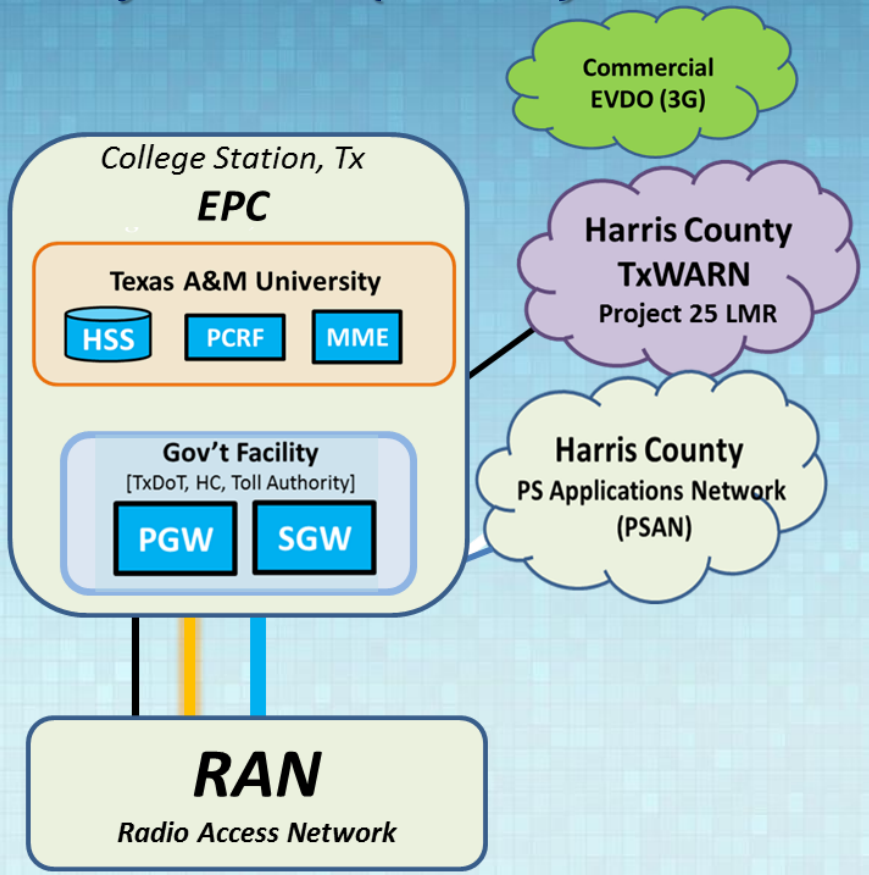

Primary Users:
- *City of Baytown*
- *Harris County Sheriff*
- *METRO Transit*

Future Users:
- *City of Houston*
- *City of Pasadena*
- *Adjacent Counties*

Illustration is conceptual, not all connections are shown.

LTE Backhaul Network

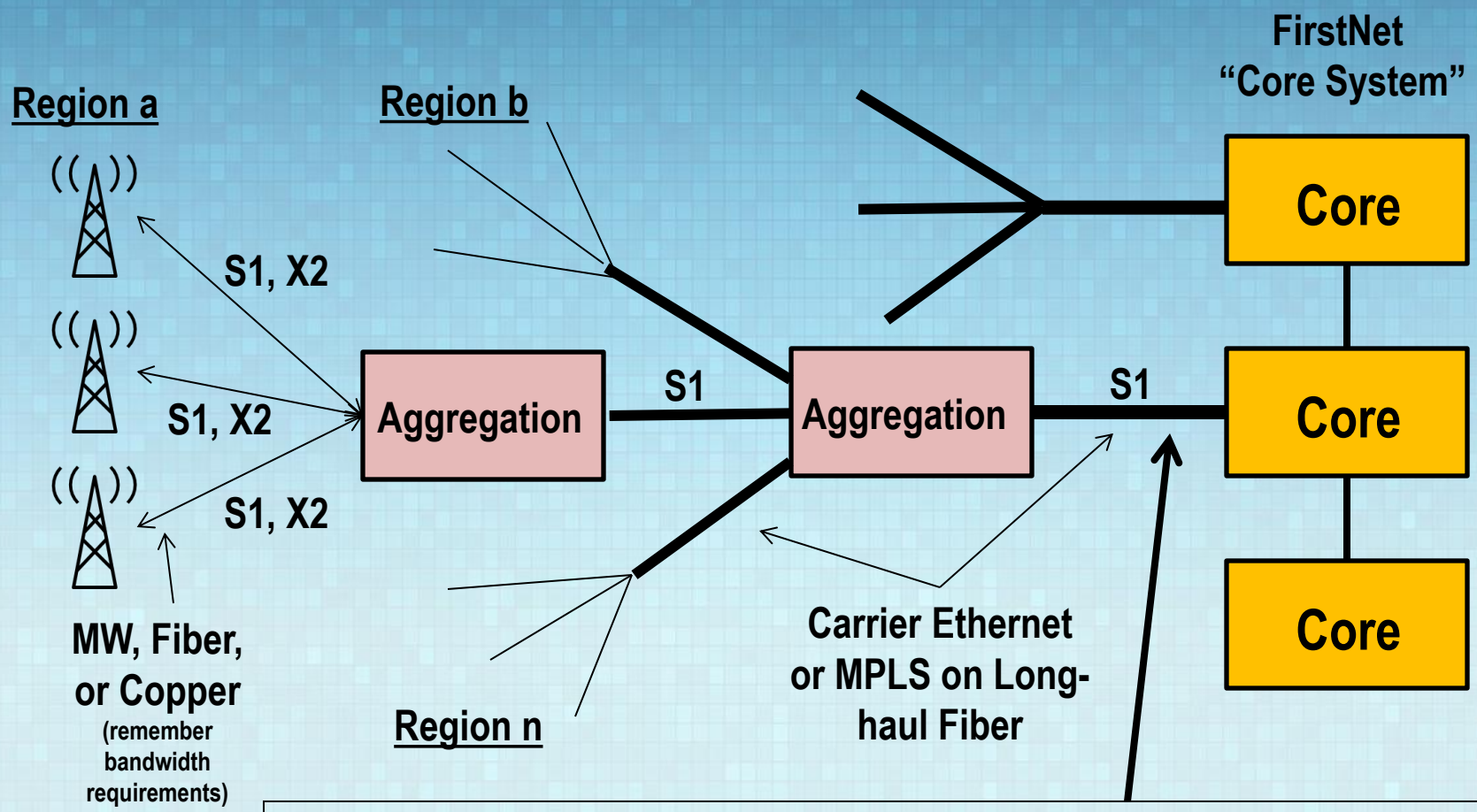

Test Question: How much bandwidth do you need just before the Core?

S1 = UE to eNB interface; X2 = adjacent eNB to eNB interface

LTE Backhaul – Take-Aways

- Backhaul per Site will likely be 50Mb/s to 150Mb/s
  - If you only have a T-1 (1.5MBps) that's what you get
  - Most 'fully energized' eNodeB's will require 150 Mbps out and 50 Mbps back to the Core
- Fiber and Wideband MW Choices
- Link Delays Must be kept Low for S1 and X2 Links
  - Excessive delays will impact effectiveness of selected LTE applications and advanced LTE features
- Backhaul Not Just a Local Requirement
  - Core elements likely 100's of mile from users
  - Be mindful of the multiplicative effect of eNodeB's

LTE Public Safety User Equipment

- Current Status
  - Currently, only one operational PS LTE system – Harris County, TX. Therefore, very low demand
  - FirstNet Legislation requires UE devices to be "certified" for use on the NPSBN – Process is TBD
  - A few devices have been submitted to PSCR for interoperability testing – some have passed
    - This testing may not be same as "Certification"
  - Harris County + BTOP networks will help establish market
- Can Assume, PS Market for LTE UE will be Like P25 Device Market
  - Limited numbers – 1 to 2M vs. 100M for SmartPhones and iPhones
  - Special hardening requirements
  - Interoperable across NPSBN, plus, LMR and MNOs
- A Quick Google Search will Give You a Good Idea of What's Out there and Direction of Technology

Examples of BC14 UE Devices

(This is not an endorsement of any vendor or products)

Motorola
LEX700

Cassidian
BVR700 Router

General Dynamics
USB Stick Modem

Harris
RF-3590 LTE

Motorola
VML700 Modem

Elektrobit
T1 Tablet

Elektrobit H3
Smartphone

Harris
InTouch RPC 200

FirstNet

FirstNet Update

- Making progress
- Hired General Manager, Assistant General Manager, General Counsel, Outreach & Education
  - About 20 contractors
  - More jobs coming
  - Funded for 2014 staff
- Held Series of "Stakeholder" Meetings With States in Preparation for "SLIGP" Consultations May-June 2013
- Texas anticipates $5.9M in SLIGP funding ~ Sept 2013
- 17 Requests for Information (RFIs) sent out, RFPs to follow
  - First RFI's sent out April 2013, remainder by end of this year
  - Many responses just back to 10 of the RFI's

17 RFIs:

- Core Systems
  - Evolved Packet Core, Network Service Platform, Transport, Data Center, Network Management Center & O&M Center
- Deployment Partners (MNO and other operating partners)
  - Deployment Partner
- Radio Access Network (RAN) Systems
  - eNodeB and Site Backhaul, Deployable RAN Infrastructure
- Satellite Network Coverage System
  - Satellite System Infrastructure (including Satellite network, vehicle pico-base station
- Operational Support Systems
  - Network Planning Tools, User and Network Planning Analytics, Workflow and Assessment Management Tool, Billing, Provisioning
- User Operations Systems
  - User Technical Support Services
- General Services
  - System Integration, Program Management

Leadership Team

FirstNet Org Chart

General Manager
Bill D'Agostino

- Cross-functional Initiatives
- Internal Communications
- Leadership team coordination
- Board Point of Contact/Materials

Chief of Staff

Executive Assistant

Deputy General Manager

- User Advocacy
- Consultation & Outreach
- Application Development
- Business Planning, Offerings & Pricings
- External/ Stakeholders Communications
- Congressional Affairs

Chief Technical Officer

- National Network:
- Carrier & Vendor Management
- Service Realization
- Technology Planning & Development
- R&D / Standards
- Applications Servers
- Tech Facilities

Chief Operations Officer

- User Device Fulfillment
- User Tech Support
- User / Agency Billing
- Devices
- General User Support
- Operations Program Mgmt.

Chief Information Officer

- Cyber Security
- Business IT Systems
- ERP, CRM databases
- Vendor Mgmt
- IT Network Security
- IT Facilities
- IT Program Mgmt.

Chief Financial Officer

- Finance
- Accounting
- Budgeting
- Internal Controls
- Audit
- Procurement Services

Chief Administrative Officer

- Human Resources (HR):
- Dispute Resolution
- NTIA Relations
- Inter-Government Relations:
- Facilities

General Counsel

- Legal Strategy
- Policy & Practices
- Business & Contact Law
- Federal law
- Employment Law
- Legal Dispute Resolution
- Regulatory Affairs
- Spectrum licensing

Texas Public Safety Broadband Program

Questions / Comments?
LTE@dps.texas.gov
Thank You!