Figure 1 - Truck Tractor Illustration for § 393.11

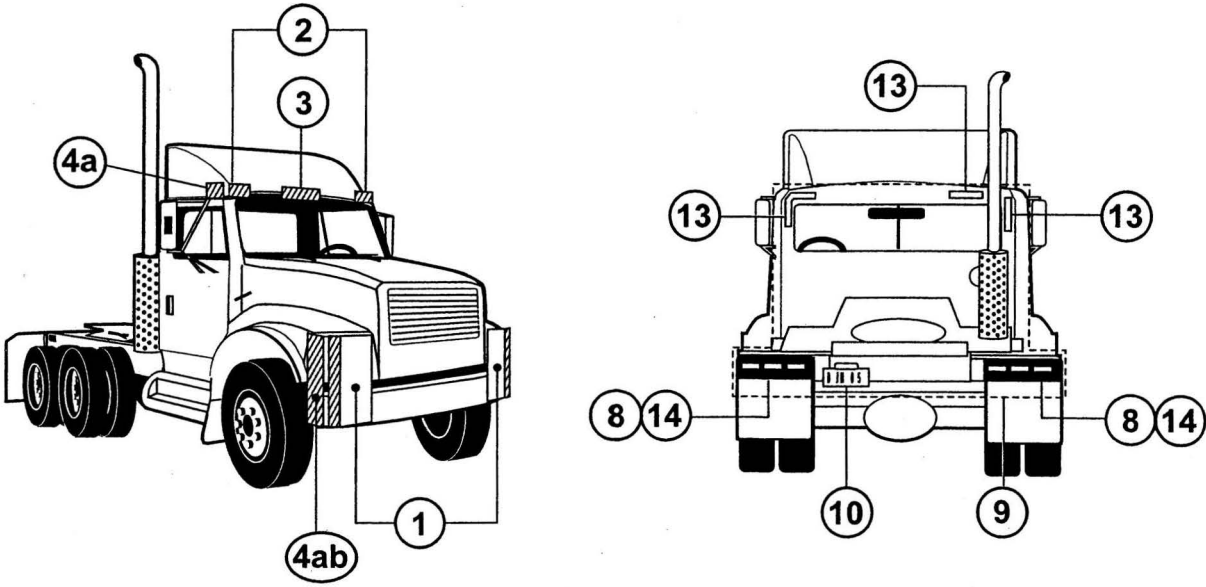

Figure 2 - Straight Truck Illustration for § 393.11

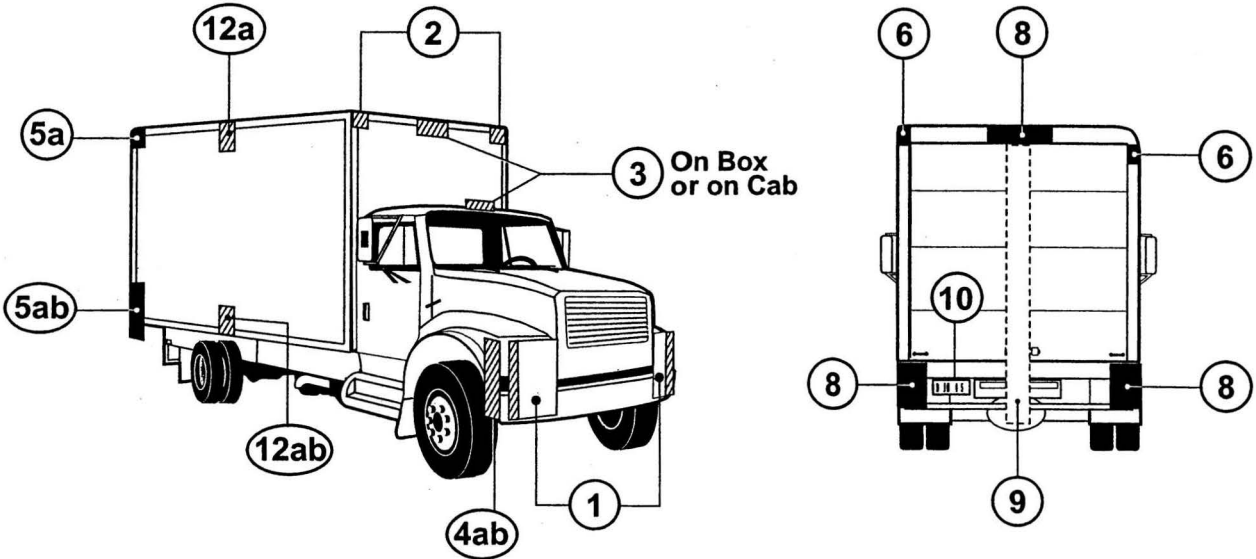

Figure 3 - Straight Truck Illustration for § 393.11

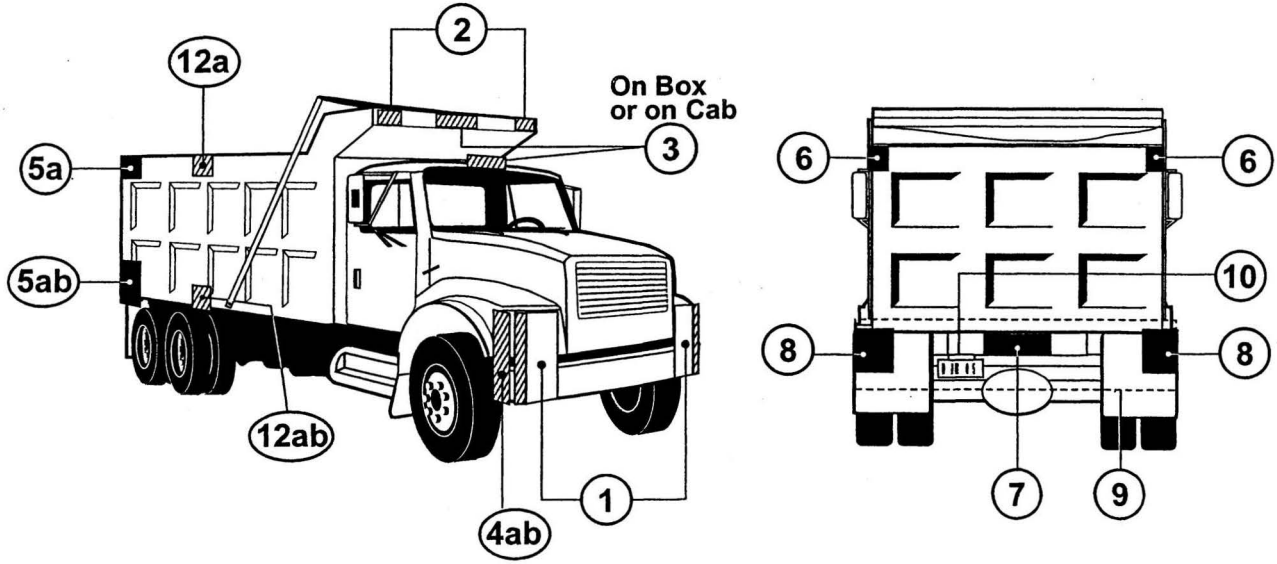

Figure 4 - Straight Truck Illustration for § 393.11

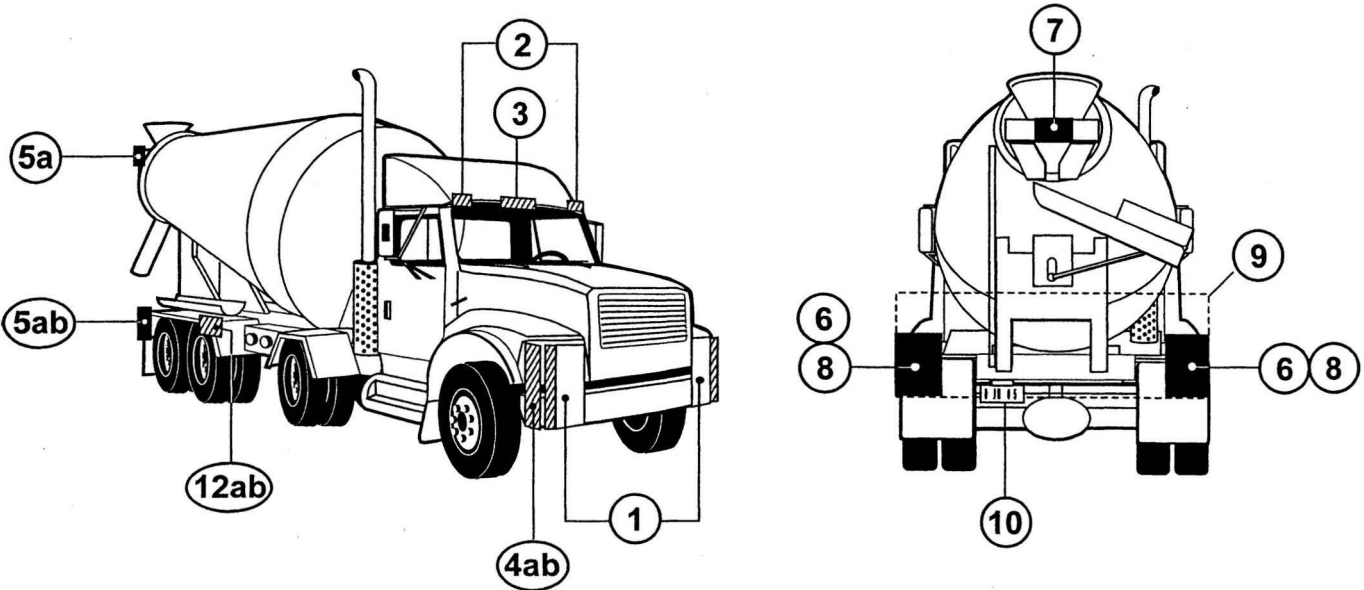

Figure 5 - Straight Truck Illustration for § 393.11

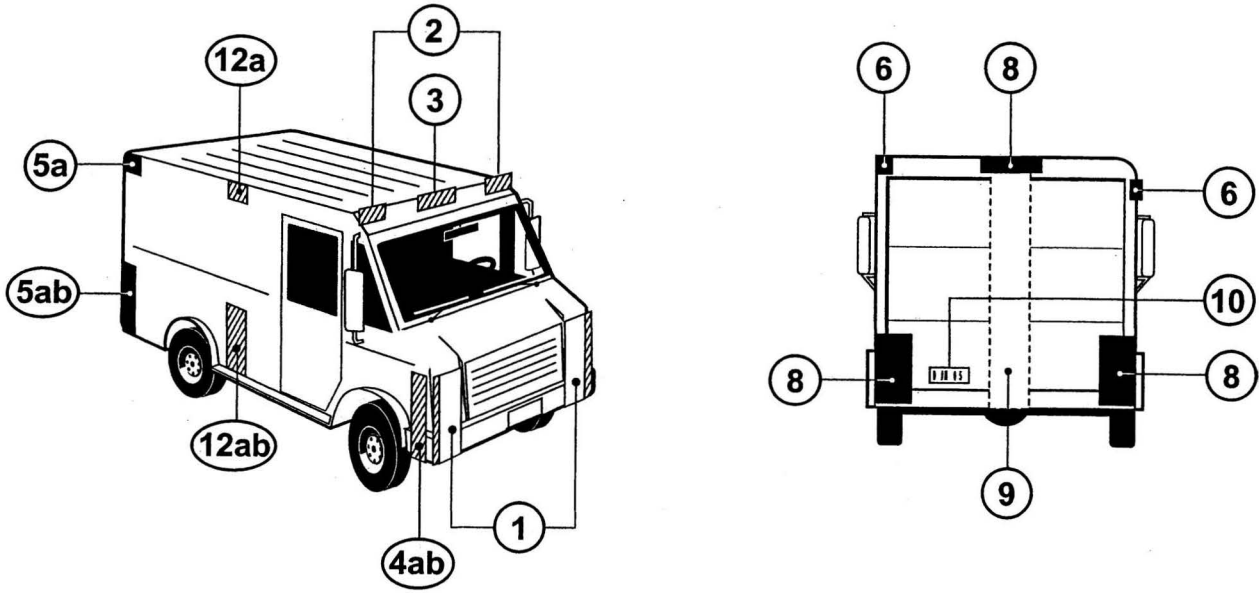

Figure 6 - Straight Truck Illustration for § 393.11

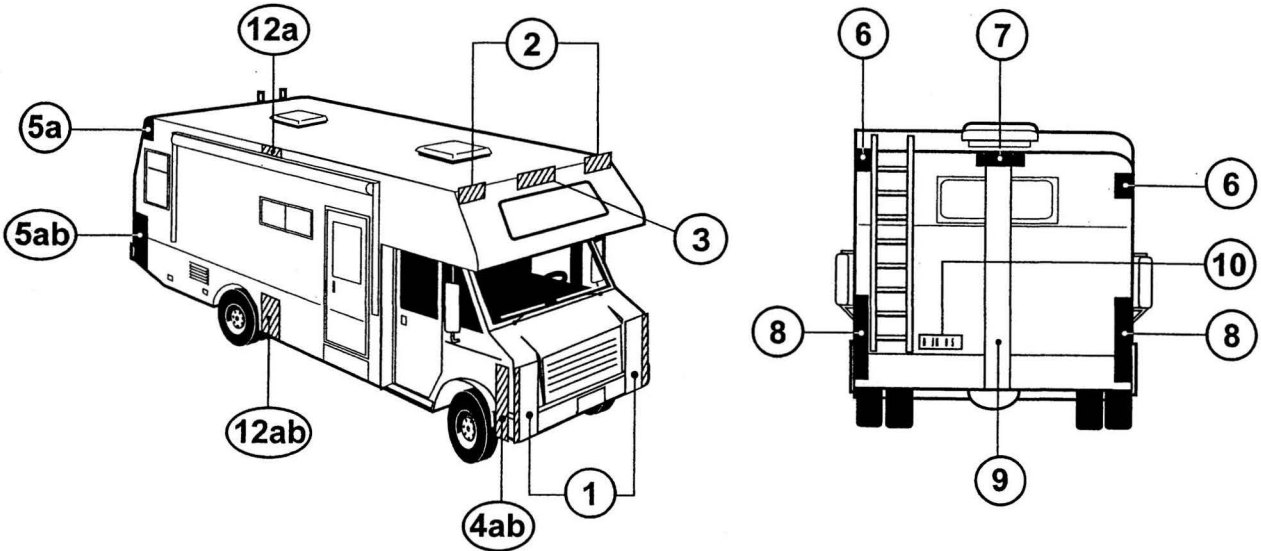

Figure 7 - Bus Illustration for § 393.11

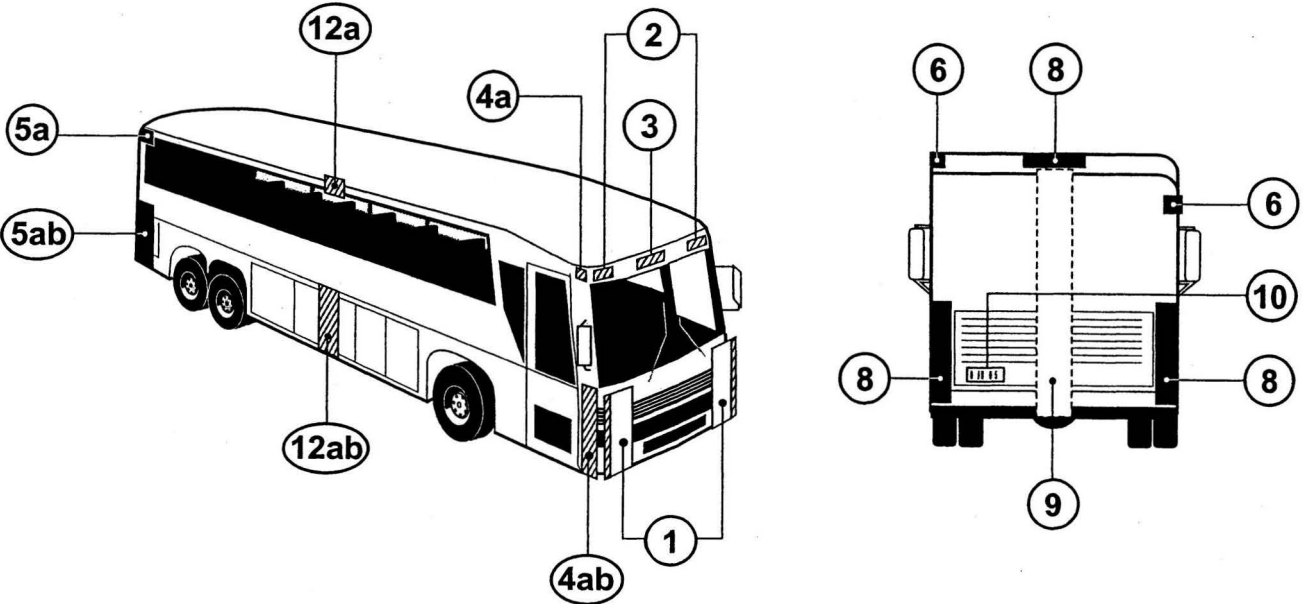

Figure 8 - Semi-Trailer Illustration for § 393.11

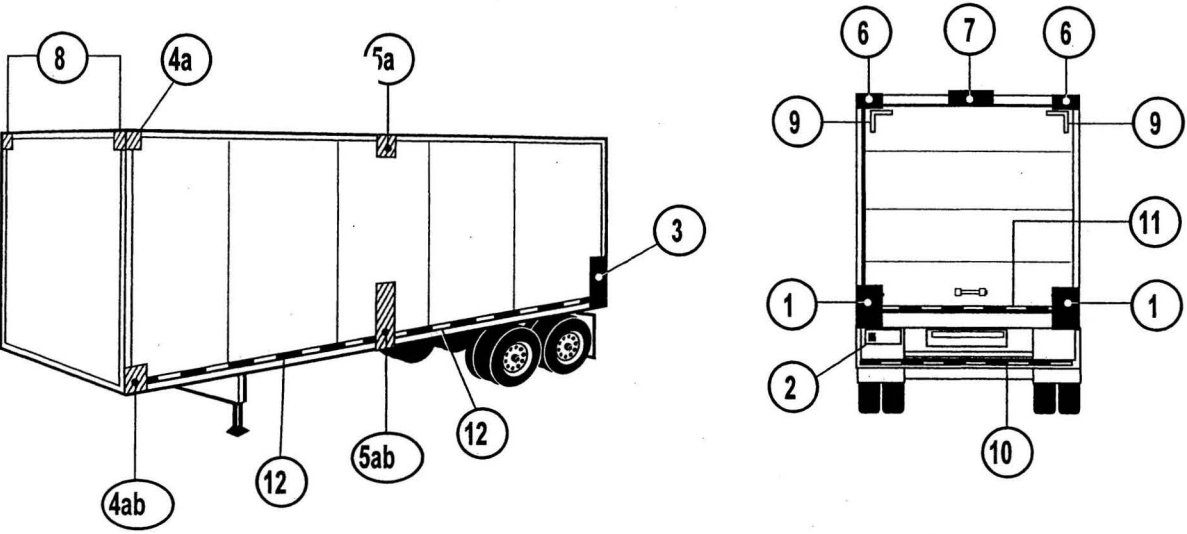

Figure 9 - Semi-Trailer Illustration for § 393.11

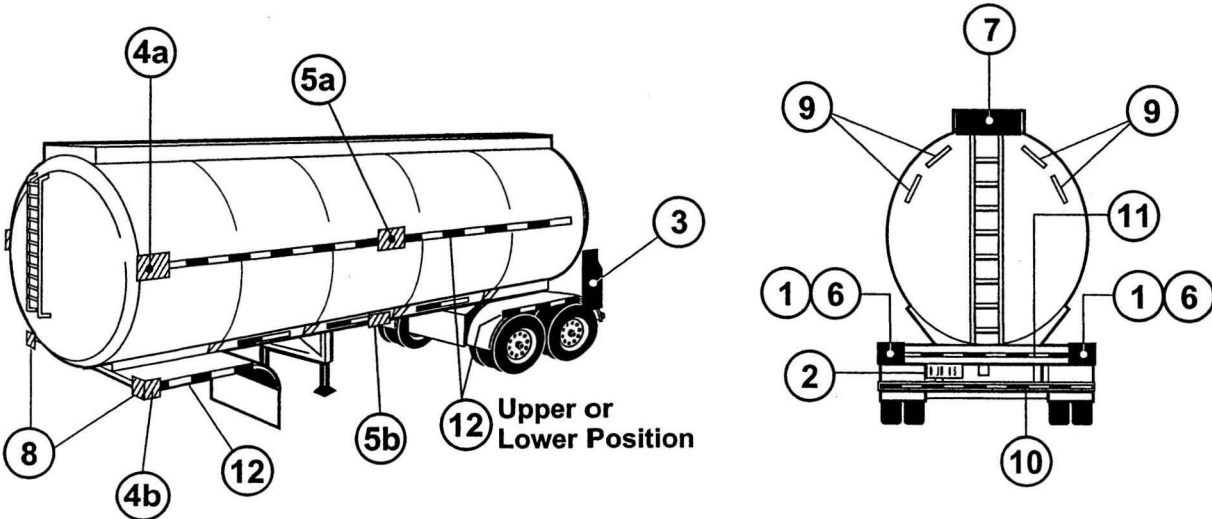

Figure 10 - Semi-Trailer Illustration for § 393.11

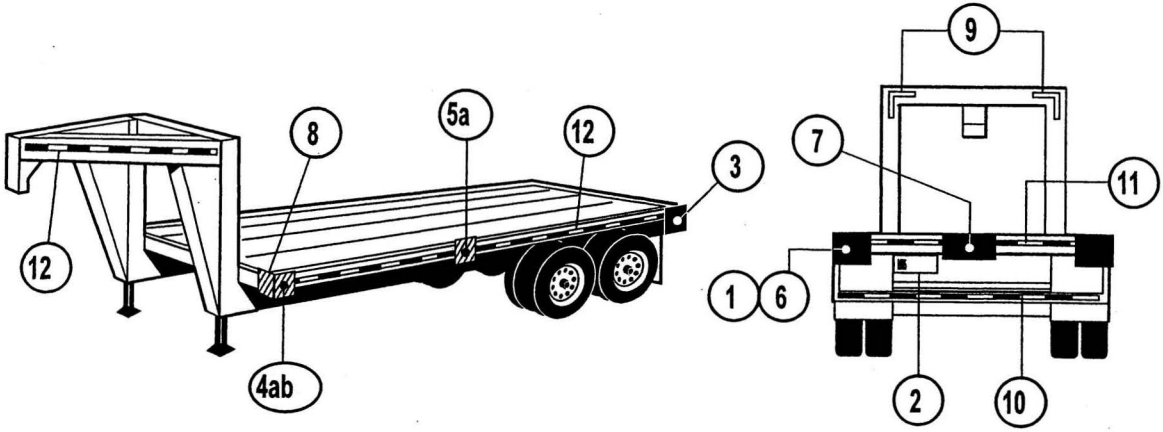

Figure 11 - Container Chassis Illustration for § 393.11

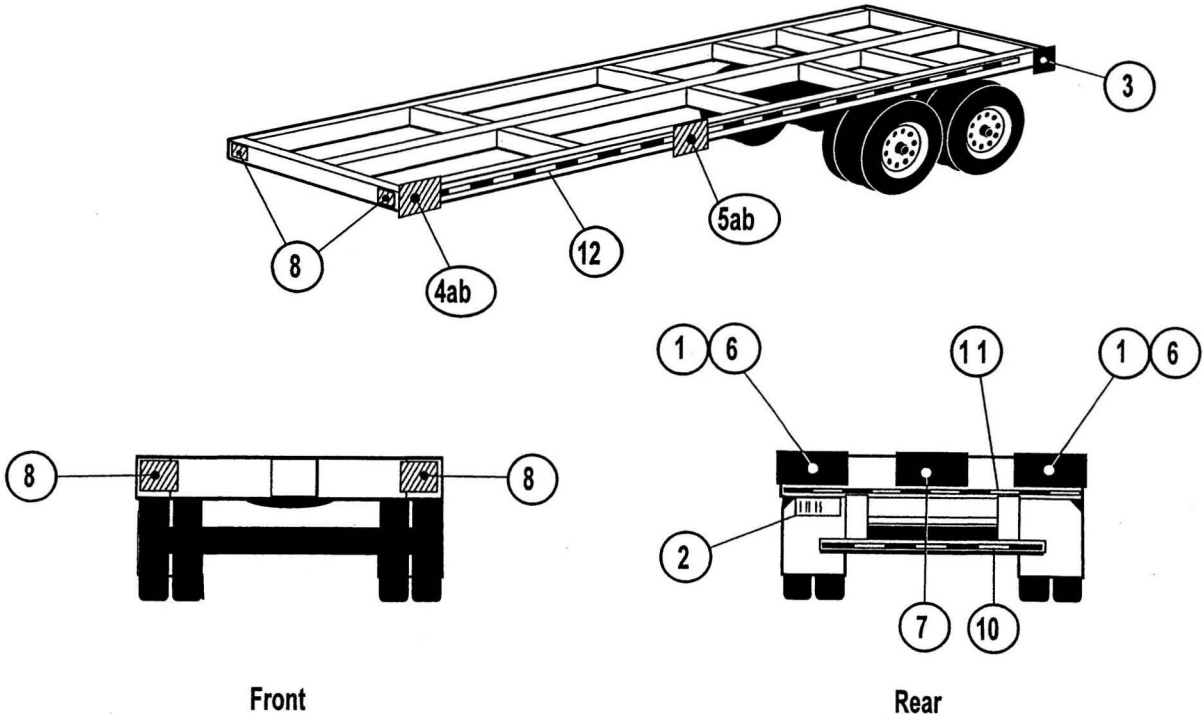

Figure 12 - Pole Trailer Illustration for § 393.11 - All Vehicle Widths

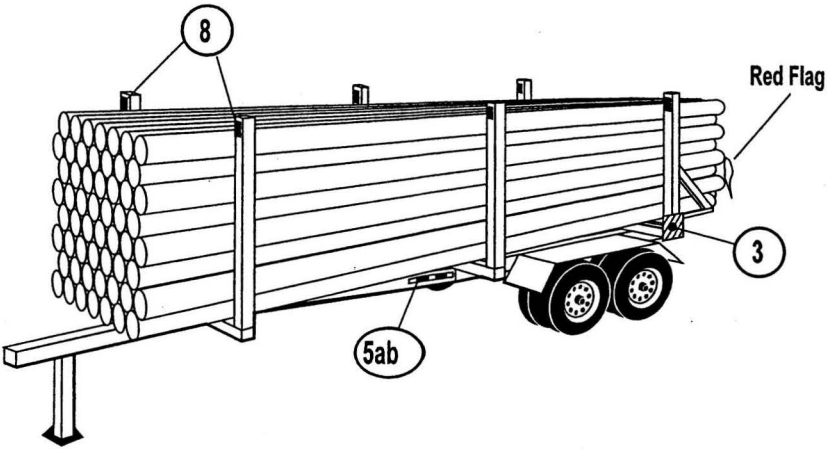

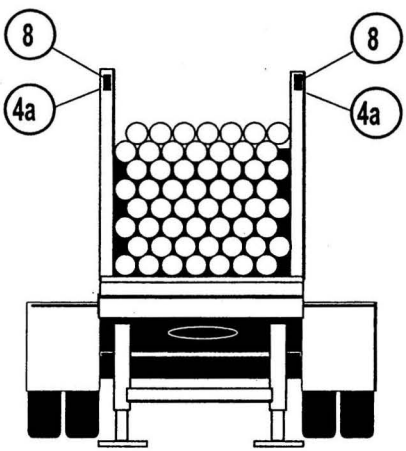

Front of Vehicle

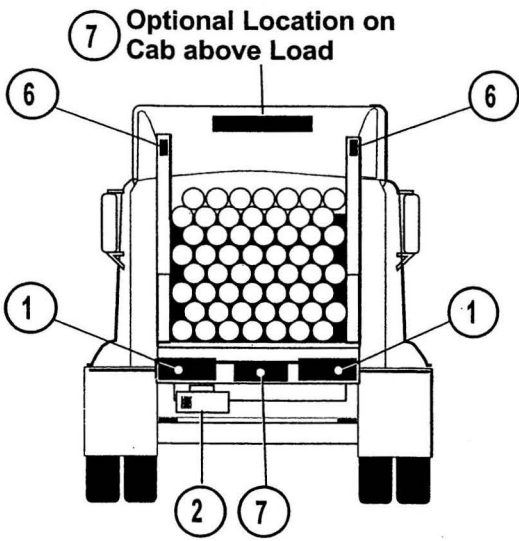

Rear of Vehicle (Including Truck Cab)

Figure 13 - Converter Dolly Illustration for § 393.11

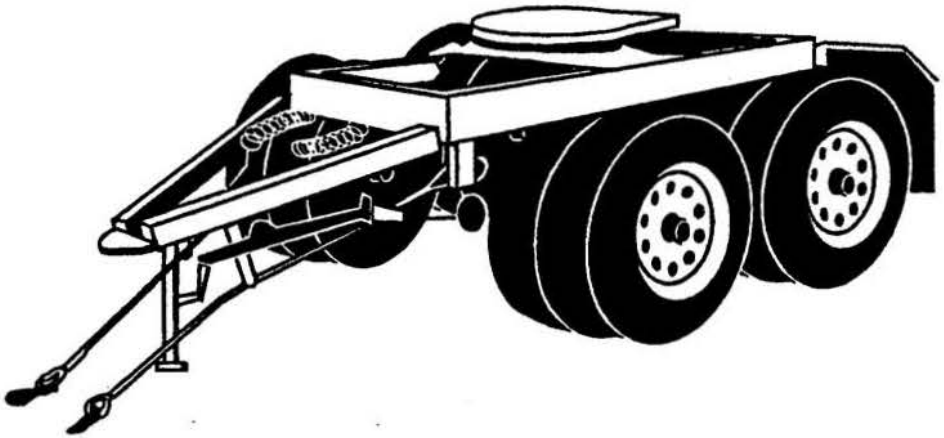

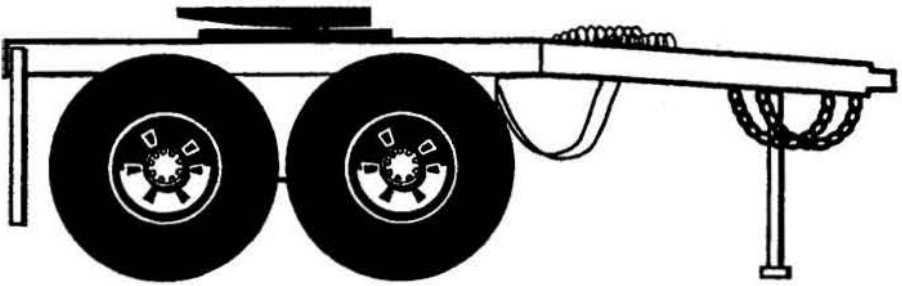

Side View of Dolly

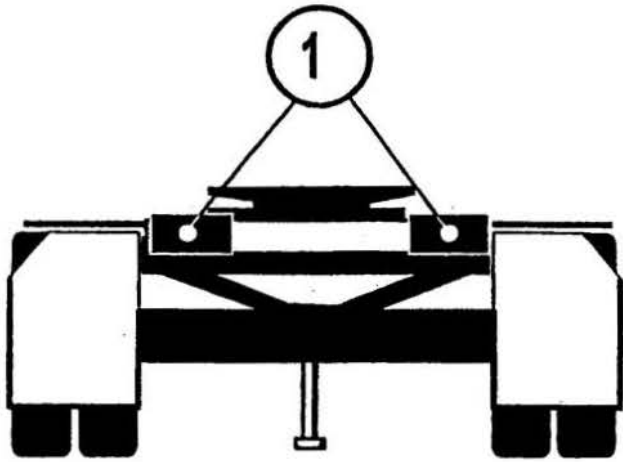

Rear

Figure 14 - Semi-Trailer Illustration for § 393.11

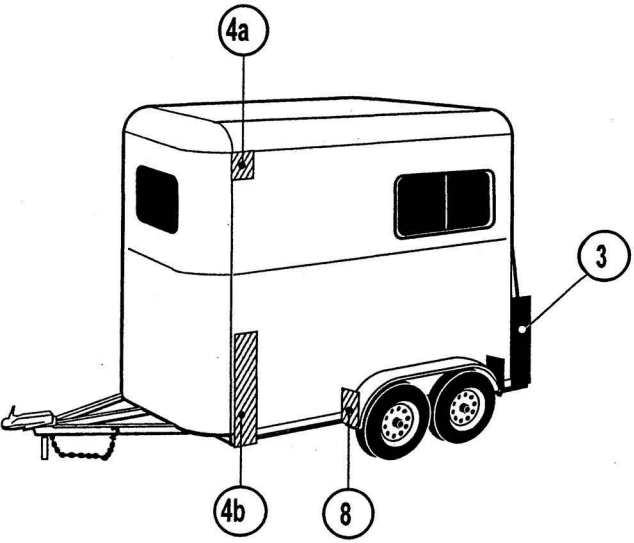

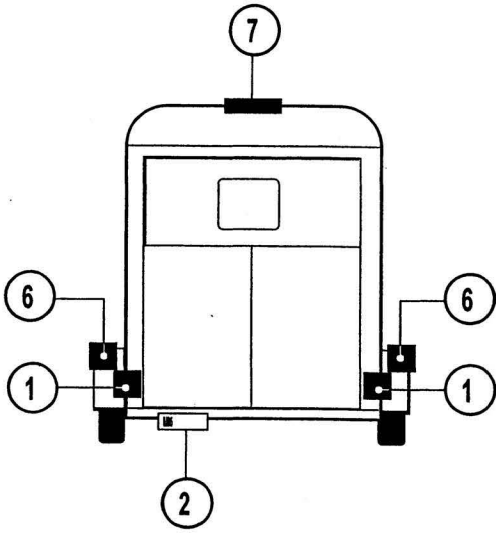

Figure 15 - Semi-Trailer Illustration for § 393.11

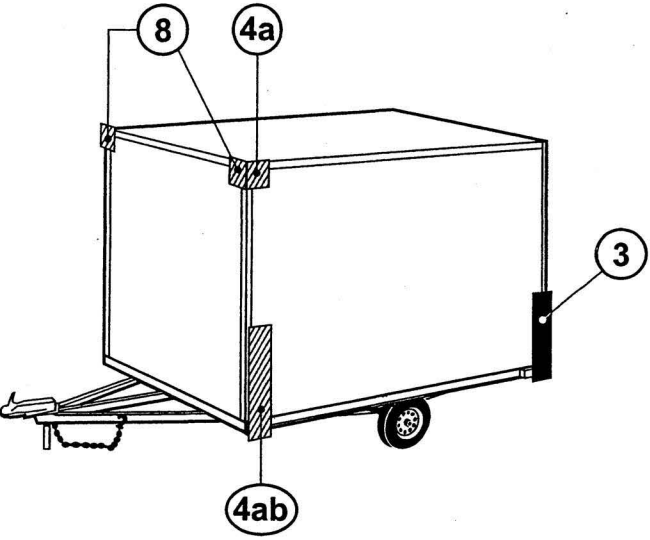

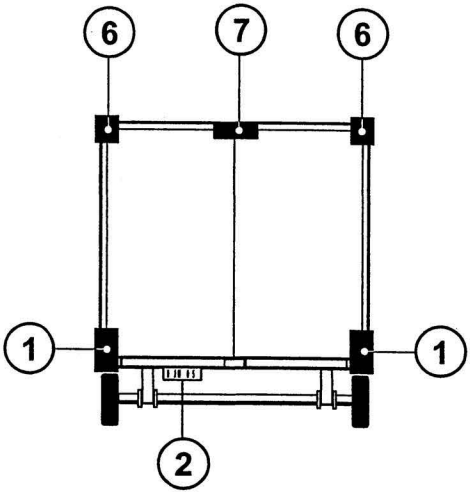

Figure 16 - Semi-Trailer Illustration for § 393.11

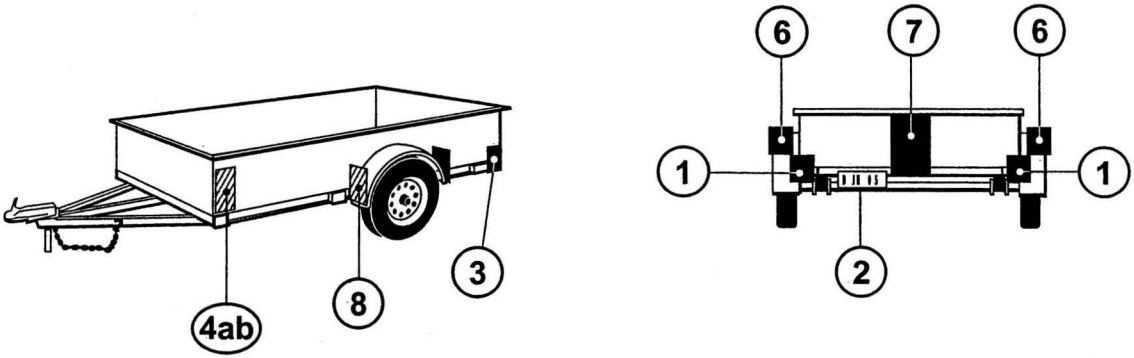

Figure 17 - Semi-Trailer Illustration for § 393.11

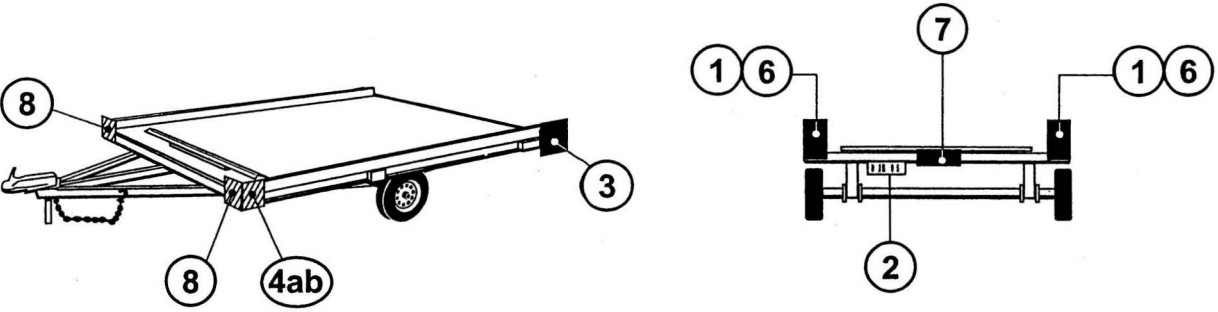

Figure 18 - Semi-Trailer Illustration for § 393.11

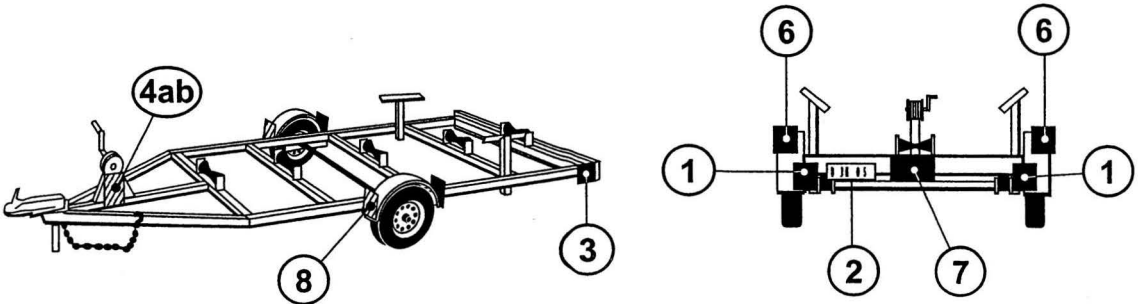

LEGEND FOR FIGURES 1 THROUGH 7 - 49 CFR 393.11
TRUCK & BUS VEHICLE ILLUSTRATIONS
(DOES NOT APPLY TO FIGURES 8 THROUGH 18 FOR TRAILERS)

Area	Equipment
1	Headlamps - Lower Beam
	Headlamps - Upper Beam
	Parking Lamps - Attention: *Required only on vehicles less than 2032mm wide*
	Front Turn Signal/Hazard Warning Lamps
2	Front Clearance Lamps - Attention: *Required for vehicles 2032mm wide or wider*
3	Front Identification Lamps (ID)
4a	Front Side Marker Lamps
4b	Front Side Reflex Reflectors
5a	Rear Side Marker Lamps - *Not required on Truck Tractors*
5b	Rear Side Reflex Reflectors - *Not required on Truck Tractors*
6	Rear Clearance Lamps Attention: *Required for vehicles 2032mm wide or wider, but not required on Truck Tractors*
7	Rear Identification Lamps (ID) Attention: *Required for vehicles 2032mm wide or wider, but not required on Truck Tractors*
8	Tail Lamps
	Stop Lamps
	Rear Turn Signal/Hazard Warning Lamps
	Rear Reflex Reflectors
9	Backup Lamp
10	License Plate Lamp
11	Center High Mounted Stop Lamp Attention: *Required for vehicles less than 2032mm wide and 4536kg*

ADDITIONAL EQUIPMENT FOR SPECIFIC TRUCKS AND BUS VEHICLES

Area	Equipment
12a	Intermediate Side Marker Lamps
12b	Intermediate Side Reflex Relectors

TRUCK TRACTORS

	DESCRIPTION
Area	Conspicuity Treatment
13	Rear Upper Body Marking
14	Rear Marking

LEGEND FOR FIGURES 8 THROUGH 18 - 49 CFR 393.11 TRAILER ILLUSTRATIONS

(DOES NOT APPLY TO FIGURES 1 THROUGH 7 FOR TRUCKS & BUSES)

Area	Equipment
1	Tail Lamps
	Stop Lamps
	Rear Turn Signal Lamps
	Rear Reflex Reflectors
2	License Plate Lamp (s)
3	Rear Side Marker Lamps
	Rear Side Reflex Reflectors
4a	Front Side Marker Lamps
4b	Front Side Reflex Reflectors

ADDITIONAL EQUIPMENT FOR TRAILERS EXCEEDING THE FOLLOWING PARAMETERS

LENGTH 9.1 m (30 ft.) OR LONGER

Area	Equipment
5a	Intermediate Side Marker Lamps
5b	Intermediate Side Reflex Reflectors

WIDTH 2.032 m (80 in.) OR WIDER

Area	Equipment
6	Rear Clearance Lamps
7	Rear Identification Lamps
8	Front Clearance Lamps

WIDTH 2.032 m (80 in.) OR WIDER AND GVWR 4,536 kg (10,000 lb.) OR MORE

	DESCRIPTION
Area	Conspicuity Treatment
9	Rear Upper Body Marking
10	Bumper Bar Marking
11	Rear Lower Body Marking
12	Side Marking