122-2-6_81361_-_F_0001_0001_U_N
August 10, 1999 10:49 AM

CONFIDENTIAL CANCELLED

REVISIONS				
SYM	ZONE	DESCRIPTION	DATE	APPROVED
A		INC EO 616-32, 616-33, 616-36, 616-39, 616-40, 616-43, 616-44, 616-45 AND 616-46		
B		INC. EO 616-48		
C		EO 616-57 INC		
D		INCR 616-024-001 INC.		
E		INC NOR 616-031-001 AND NOR 616-034-001		
F		INC NOR 616-039-001 AND NOR 616-042-001-002	12 JUL 85	

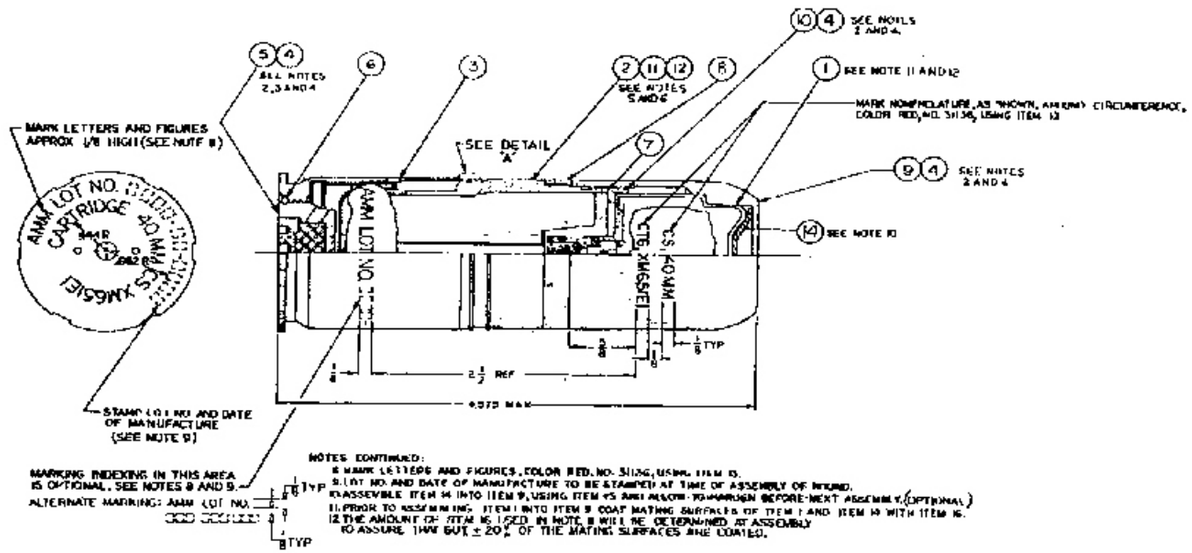

NOTES CONTINUED:
8. MARK LETTERS AND FIGURES, COLOR RED, NO. 31136, USING ITEM 13.
9. LOT NO AND DATE OF MANUFACTURE TO BE STAMPED AT TIME OF ASSEMBLY OF INNERD.
10. ASSEMBLE ITEM 14 INTO ITEM 9, USING ITEM 13 AND ALLOW 10 MINUTES BEFORE NEXT ASSEMBLY. (OPTIONAL)
11. PRIOR TO ASSEMBLING ITEM 1 INTO ITEM 9 COAT MATING SURFACES OF ITEM 1 AND ITEM 10 WITH ITEM 16.
12. THE AMOUNT OF ITEM 16 USED IN NOTE 11 WILL BE DETERMINED AT ASSEMBLY TO ASSURE THAT 60% ± 20% OF THE MATING SURFACES ARE COATED.

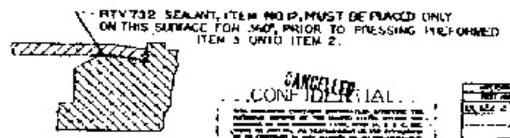

CONFIDENTIAL CANCELLED

THIS DRAWING IS INCOMPLETE WITHOUT LM122-2-6

QTY PER	DESIGNATION NO	NOMENCLATURE	MATERIAL	SPECIFICATION	ITEM NO
		TOP OF MATERIALS			

CHEMICAL CORPS

CARTRIDGE, 40MM, CS, XM65E1

CODE IDENT NO	SIZE	DWG NO	SHEET
81361	D	DI22-2-6	

SCALE 2/1